Please check web site at www.onboardsystems.com for the latest revision of this manual

Instructions for Continued Airworthiness

Cargo Swing Suspension System for the Airbus Helicopters AS350 Series Helicopter

Part Number 200-280-01

STC SR01164SE

13915 NW 3rd Court Vancouver, Washington 98685 USA
Phone: 360-546-3072 Fax: 360-546-3073 Toll Free: 800-275-0883
www.OnboardSystems.com

THIS PAGE INTENTIONALLY LEFT BLANK

Record of Revisions

Revision	*Date*	*Page(s)*	*Reason for Revision*
10	05/09/14	Section 0 Page 1, Section 5 Pages 1, 4, 5, 9, 10 & 14, Section 25 Pages 3-6, 8, 9, 16, 17, 22, 23, & 25	Updated Eurocopter to Airbus Helicopters. Added load cell P/N 210-249-03 and link assembly P/N 232-436-01. Replaced fuel drain guard P/N 290-889-00 with 290-889-01.
11	09/14/15	Section 5 Pages 10, 12, 13, 15-17 Section 25 Page 22	Clarified parts requiring NDT, added inspection criteria for 235-117-00, expanded re-assembly instructions including instructions for tightening load cell nut.
12	02/21/18	Section 4 Section 5 Page 10	Removed magnetic particle inspection requirement for load cell assembly, inserted instructions to return load cell to factory for inspection/calibration. Updated language in Section 4.
13	09/24/21	Section 5 Page 1 Section 25 Pages 20-22	Added note specifying no maintenance to be performed on the load indicator. Added figure and detail for routing of external manual release cable.
14	06/20/24	Section 5	Added disassembly and inspection of upper load cell joint to annual/100 hour inspection. Re-formatted inspection figures and inspection table.
15	10/29/24	Section 5, pages 1, 10, 13	Added note that there is no maintenance to be performed on the load weigh Indicator. Corrected bolt P/N 511-239-00 to 510-762-00. Corrected wear limit of Shaft Retaining Bushing P/N 290-740-00.
16	11/10/25	Section 5, pages 11 and 17-20	Added original Suspension Cable P/Ns 232-140-00 and 232-141-01 of cargo swing suspension system P/N 200-280-00.
17	08/05/26	Section 5 pages 4 through 22 Section 25 Page 16	Updated Figure 5.2.2 to show sub-assembly P/N 232-145-25 parts. Corrected Hook Bumper P/N to 290-774-00 and nut P/N 510-718-00 to P/N 510-440-00 (P/N 510-718-00 is optional). Added Special Inspection for Torsional Loads. Corrected nut P/N in Figure 25.16.9.

THIS PAGE INTENTIONALLY LEFT BLANK

List of Effective Pages

Title	Pages	Revision	Date
Cover	i, ii Blank	17	08/05/26
Record of Revisions	iii, iv Blank	17	08/05/26
List of Effective Pages	v, vi Blank	17	08/05/26
Table of Contents	vii, viii, ix, x Blank	17	08/05/26
Section 0 Introduction	1	10	05/09/14
Section 0 Introduction	2	6	08/12/10
Section 4 Airworthiness Limitations	1, 2 Blank	12	02/21/18
Section 5 Inspection and Overhaul Schedule	1	15	10/29/24
Section 5 Inspection and Overhaul Schedule	2, 3	14	06/20/24
Section 5 Inspection and Overhaul Schedule	4 thru 21, 22 Blank	17	08/05/26
Section 11 Placards and Markings	1, 2 Blank	9	04/16/12
Section 12 Servicing	1 thru 3, 4 Blank	9	05/01/12
Section 25 Operation Instructions	1, 2	6	08/12/10
Section 25 Operation Instructions	3 thru 6	10	05/09/14
Section 25 Operation Instructions	7	6	08/12/10
Section 25 Operation Instructions	8, 9	10	05/09/14
Section 25 Operation Instructions	10 thru 15	6	08/12/10
Section 25 Operation Instructions	16	17	08/05/26
Section 25 Operation Instructions	17	10	05/09/14
Section 25 Operation Instructions	18, 19	6	08/12/10
Section 25 Operation Instructions	20 thru 27	13	09/24/21

THIS PAGE INTENTIONALLY LEFT BLANK

CONTENTS

Identification	**Title, Page**	
Section 0	**Introduction**	**00-00-00**
	0.4 Scope, 1	
	0.5 Purpose, 1	
	0.6 Arrangement, 1	
	0.7 Applicability, 1	
	0.9 Abbreviations, 1	
	0.12 Precautions, 2	
	0.19 Distribution of Instructions for Continued Airworthiness, 2	
Section 4	**Airworthiness Limitations**	**04-00-00**
	4.2 No airworthiness limitations, 1	
Section 5	**Inspection and Overhaul Schedule**	**05-00-00**
	5.1 Annual/100 Hour Inspection, 1	
	5.2 5 Year/1000 Hour Inspection, 8	
	5.3 Cargo Hook Overhaul Schedule, 21	
Section 11	**Placards and Markings**	**11-00-00**
	11.1 Placards, 1	
Section 12	**Servicing**	**12-00-00**
	12.2 Lubrication Information, 1	
Section 25	**Equipment and Furnishings**	**25-00-00**
	25.1 Cargo hook connector, 1	
	25.2 Description, 2	
	25.5 Component Weights, 4	
	25.12 Storage Instructions, 4	
	25.15 Troubleshooting, 5	
	25.16 Component Removal, 11	
	25.17 Component Re-installation, 18	
	25.18 General Procedures Instructions-Testing, 27	

Figures

5.1.1 Manual Release Cable Inspection, Section 5 Page 2
5.1.2 Manual Release Cable Conditions, Section 5 Page 2
5.1.3 Manual Release Cable Rigging, Section 5 Page 3
5.1.4 Load Cell Inspection, Section 5 Page 5
5.1.5 Gimbal DU Bearing Inspection Criteria, Section 5 Page 5
5.1.6 Gimbal Assembly Inspection, Section 5 Page 6
5.2.1 Suspension Cable to Swing Frame Attachment, Section 5 Page 9
5.2.2 Swing Frame Assembly Part, Section 5 Page 9
5.2.3 Suspension Cable Parts, Section 5 Page 10
5.2.4 Shackle Assembly Parts, Section 5 Page 10
5.2.5 Swing Frame Orientation, Section 5 Page 17
5.2.6 Suspension Cable P/N 232-140-00/232-141-00 Parts, Section 5 Page 18
5.2.7 Shackle Assembly P/N 232-137-00 Parts, Section 5 Page 20
12.1 Shackle Assembly Lubrication, Section 12 Page 2
12.2 Upper Gimbal Grease Fitting Lubrication, Section 12 Page 3
25.1 Un-commanded Cargo Hook Release, Section 25 Page 1
25.2.1 System Overview, Section 25 Page 2
25.2.2 Fuel Drain Guard Overview, Section 25 Page 3
25.2.3 Fuel Drain Guard Components, Section 25 Page 4
25.15.1 Cargo Hook Electrical Connector, Section 25 Page 6
25.15.2 Wire Harness Routing, Section 25 Page 7
25.15.3 Electrical Schematic, Section 25 Page 8
25.15.4 CAL Code, Section 25 Page 10
25.15.5 Changing Dampening Level, Section 25 Page 10
25.16.1 Suspension Attachment Hardware, Section 25 Page 11
25.16.2 Manual Release Cable Connection, Section 25 Page 12
25.16.3 Manual Release Cover Removal, Section 25 Page 12
25.16.4 Fixed Manual Release Cable Routing, Section 25 Page 13
25.16.5 Cable Attachment at Landing Gear Fitting, Section 25, Page 14
25.16.6 Cable Attachment at Frame 1790.15, Section 25, Page 14
25.16.7 Manual Release Lever, Section 25, Page 15
25.16.8 Load Weigh Indicator, Section 25, Page 15
25.16.9 Load Cell Hardware, Section 25, Page 16
25.16.10 Fuel Drain Guard Removal, Section 25 Page 17
25.17.1 Suspension Cable Attachment, Section 25, Page 18
25.17.2 Cargo Hook Attachment Hardware, Section 25, Page 19
25.17.3 Manual Release Cable Fitting Adjustment, Section 25, Page 20
25.17.4 Manual Release Cable Routing, Section 25, Page 20
25.17.5 Manual Release Cable Connection, Section 25, Page 21
25.17.6 Manual Release Cable Rigging, Section 25, Page 22
25.17.7 Sealant Application Location, Section 25, Page 24
25.17.8 Guard/Retainer Assembly, Section 25, Page 24
25.17.9 Lever Installation, Section 25, Page 25
25.17.10 Cable Setting, Section 25, Page 26

Tables

5.2.1 Swing Suspension Parts List, Section 5 Page 11
5.2.2 Swing Suspension Inspection Criteria, Section 5 Page 13
5.2.3 Suspension Cable 232-140-00/232-141-00 Parts, Section 5 Page 19
5.2.4 Suspension Cable 232-140-00/232-141-00 Inspection, Section 5 Page 19
5.2.5 Shackle Assembly P/N 232-137-00 Parts List, Section 5 Page 20
5.2.6 Shackle Assembly P/N 232-137-00 Inspection Criteria, Section 5 Page 20
11.1 Cargo Hook Suspension Placards, Section 11 Page 1
25.1 Cargo Hook Connector, Section 25 Page 1
25.2 Component Weights and CGs, Section 25 Page 4
25.3 Troubleshooting, Section 25 Page 5

THIS PAGE INTENTIONALLY LEFT BLANK

Section 0
Introduction

0.4 Scope

The following information is necessary to carry out the service, maintenance, and inspection of the Cargo Hook Swing Suspension System P/N 200-280-01.

0.5 Purpose

The purpose of this Instructions for Continued Airworthiness (ICA) manual is to provide the information necessary to inspect, service, and maintain in an airworthy condition the P/N 200-280-01 Cargo Hook Swing Suspension System.

0.6 Arrangement

This manual contains instructions for the service, maintenance, inspection and operation of the Cargo Hook Swing Suspension System P/N 200-280-01 on Airbus Helicopters AS350 series helicopters. The manual is arranged in the general order that maintenance personnel would use to install, maintain and operate the Cargo Hook Swing Suspension System in service.

The arrangement is:

Section 0 Introduction
Section 4 Airworthiness limitations (None apply to this System.)
Section 5 Inspection and overhaul schedule
Section 11 Placards and Markings
Section 12 Servicing
Section 25 Equipment and Furnishings

0.7 Applicability

These Instructions for Continued Airworthiness are applicable to Cargo Hook Swing Suspension System P/N 200-280-01 (with Cargo Hook P/N 528-023-01) for the Airbus Helicopters AS350 Series Helicopters. Refer to the appropriate Airbus Helicopters maintenance documentation for instructions regarding parts of the aircraft that interface with the P/N 200-280-01 system.

0.9 Abbreviations

FAA Federal Aviation Administration
CFR Code of Federal Regulations
ICA Instructions for Continued Airworthiness

0.12 Precautions

The following definitions apply to safety labels in this manual.



Indicates a hazardous situation which, if not avoided, will result in death or serious injury.



Indicates a hazardous situation which, if not avoided, could result in death or serious injury.



Indicates a hazardous situation which, if not avoided, could result in minor or moderate injury.



Draws the reader's attention to important or unusual information not directly related to safety.



Used to address practices not related to personal injury.

0.19 Distribution of Instructions for Continued Airworthiness

Before performing maintenance ensure that the Instructions for Continued Airworthiness (ICA) in your possession is the most recent revision. Current revision levels of all manuals are posted on Onboard Systems Int'l web site at www.onboardsystems.com. Also a Documentation Update Service is available on the web site. Registering for this service provides an e-mail or fax notification when a manual has been revised. Hard copies of all manuals are available from the factory, contact the factory at 800-275-0883 to request a copy.

Section 4
Airworthiness Limitations

4.2 No airworthiness limitations

The Airworthiness Limitations section is FAA approved and specifies inspections and other maintenance required under Secs. 43.16 and 91.403 of the Federal Aviation Regulations unless an alternative program has been FAA approved.

No airworthiness limitations are associated with this type design change.

THIS PAGE INTENTIONALLY LEFT BLANK

Section 5
Inspection and Overhaul Schedule

The scheduled inspection intervals (Annual/100 Hour and 5 Year/1000 Hour) are defined herein. If the system is subjected to unusual circumstances, extreme environmental conditions, etc., it is the responsibility of the operator to perform the inspections more frequently to ensure proper operation. Refer to Section 5.1 for the Annual/100 Hour Inspection and Section 5.2 for the 5 Year/1000 Hour Inspection.

There is no maintenance to be performed on the load weigh indicator. Do not open the enclosure, if repair is needed return it to the factory.

5.1 Annual/100 Hour Inspection

Annually, or 100 hours of external load operations, whichever comes first, inspect the cargo swing suspension per the following. A grace period of 1 month or 10 hours of external load operations can be applied to this interval for maintenance scheduling convenience only. Refer also to Component Maintenance Manual (CMM) 122-005-00 for additional inspection.

NOTICE

*Hours of external load operations should be interpreted to be **(1)** anything is attached to the primary cargo hook (whether or not a useful load is being transported) and **(2)** the aircraft is flying. If these conditions are **NOT** met, time does **NOT** need to be tracked.*

1. Activate the electrical system and press the Cargo Release button to ensure the cargo hook electrical release system is operating correctly. With no load on it, the cargo hook must release. Reset the hook by hand after release.

CAUTION

Depressing the button continuously in excess of 20 seconds will cause the cargo hook solenoid to overheat, possibly causing permanent damage.

2. Activate the manual release system by pulling the release lever in the cockpit. With no load on it, the cargo hook must release. Reset the cargo hook by hand after release.

⚠ CAUTION

In the fully locked position, the hook lock indicator must align with the lines on the manual release cover (see Figure 5.1.1).

5.1 Annual/100 Hour Inspection continued

3. Visually inspect the external manual release cable for damage and security, with emphasis on the cargo hook end of the release cable (refer to Figure 5.1.1).

Figure 5.1.1 Manual Release Cable Inspection

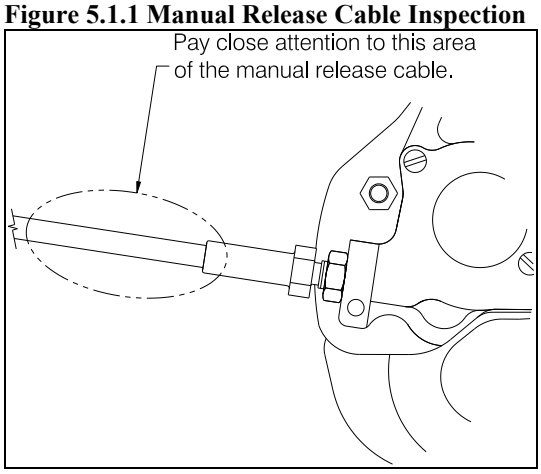

4. Remove the manual release cover from the cargo hook and inspect the visible section of the inner cable for kinks or frays.

⚠ CAUTION

Manual release cables are wearable items and must be replaced as condition requires. Broken or kinked conduit, inner cable kinks (ref Figure 5.1.2), frays, or sticky operation are each cause for immediate replacement.

Figure 5.1.2 Manual Release Cable Conditions

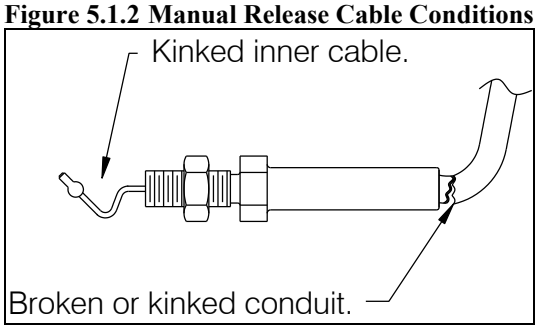

5.1 Annual/100 Hour Inspection continued

5. Check the manual release cable rigging. With the cargo hook load beam closed and locked, rotate the manual release lever clockwise to remove the free play (the free play is taken up when the hook lock indicator begins to move, this is also readily felt as the lever rotates relatively easily for several degrees as the free play is taken up) and hold it in this position while checking the gap between the release lever fork and the cable ball end as shown below. A minimum gap of 1/8" (3.2 mm) should be present as shown in Figure 5.1.3.

Figure 5.1.3 Manual Release Cable Rigging

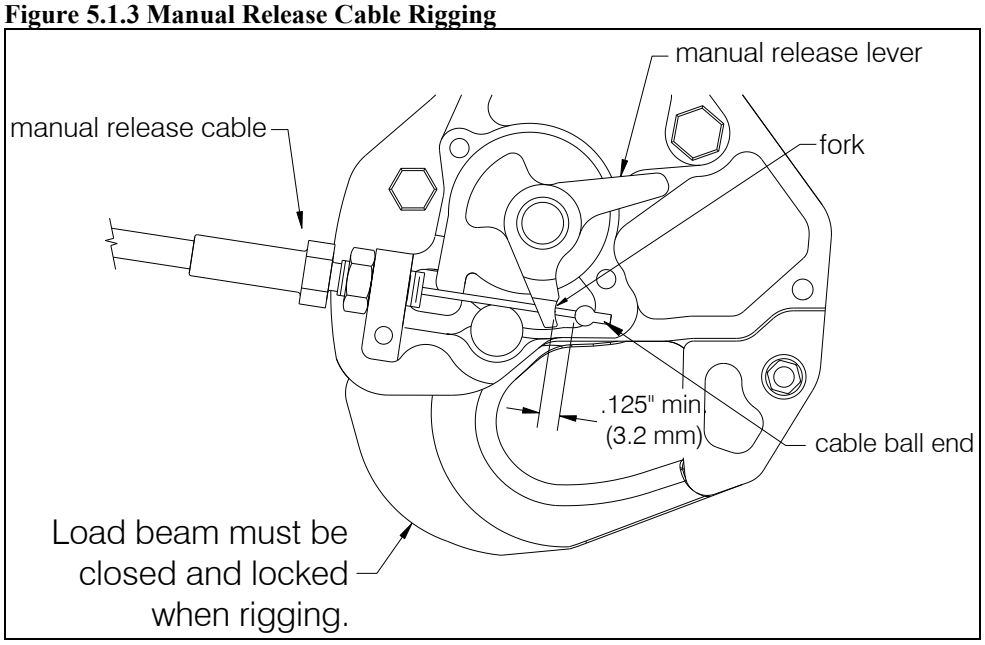

6. Visually inspect for presence and security of fasteners and electrical connections.
7. Visually inspect the external electrical wire harnesses for damage, chafing and security.
8. Visually inspect for corrosion on the exterior of the cargo hook, load cell and swing suspension components.
9. Visually inspect the cargo hook and swing frame assembly bumpers for damage and security.
10. Swing the cargo hook and the swing suspension and ensure all pivot points rotate freely without binding.
11. Move the cargo hook and the swing suspension throughout their full ranges of motion and observe the manual release cable, electrical harnesses, and ground strap to ensure that they have enough slack. The release cable, harnesses, and ground strap must not be the stops that prevent the cargo hook or suspension from moving freely in all directions.

5.1 Annual/100 Hour Inspection continued

12. Visually inspect for cracks in the welded suspension frame. Pay special attention to the areas around the welds. The frame tubes contain a corrosion preventative compound, which may leak out through a crack and provide an indication. At any sign of cracking, remove and replace discrepant part.

13. Inspect suspension cables for broken strands, paying close attention to the sections around the thimbles at each end. Pass a cloth over the cables. This will clean the load ropes for a visual inspection and detect broken wires if the cloth snags on the rope. Ten randomly distributed broken wires in one rope lay (one complete rotation around the wire) or five broken wires in one strand in one rope lay is considered unacceptable. One rope lay is the length along the rope which a single strand requires to make one complete spiral around the core.

14. Disassemble and inspect the upper joint of the load cell (16) per the following, referring to Figure 5.2.2 for item numbers in parentheses ( ). If Swing Frame Assembly has been subjected to torsional loading, see Special Inspection for Torsion involving further disassembly and inspection instructions in step 15.

    a. Remove the cotter pin (22), nut (21), washer (20), and Retaining Bushing (18) from the end of the bolt (19).

    b. While supporting the load cell and cargo hook (28), remove the bolt and the other Retaining Bushing (18) and slide the Gimbal Shaft (17) out of the joint, separating the load cell from the Gimbal (1.1).

    c. Visually inspect the Gimbal Shaft for signs of wear, such as pitting, galling, or reduction in diameter. If reduction in diameter is observed, refer to the criteria in Table 5.2.2. There should be no visible wear, except for light burnishing of the outside diameter surface. If the burnishing can be removed using Scotch Brite (3M P/N 7447), it is considered light.

    d. Inspect the inside diameters of the upper lugs of the load cell (refer to Figure 5.1.4) for signs of wear such as pitting, galling, or elongation of the holes. If elongation is observed, refer to the size limits criteria in Table 5.2.2. There should be no visible wear, aside from light burnishing of the inside diameter surfaces. If the burnishing can be removed using the Scotch Brite, it is considered light.

       Visually inspect for cracks around both lugs, including the transitional areas (indicated in Figure 5.1.4) where the lugs transition into the flat portion of the load cell. Inspect these areas on both sides.

5.1 Annual/100 Hour Inspection continued

Figure 5.1.4 Load Cell Inspection

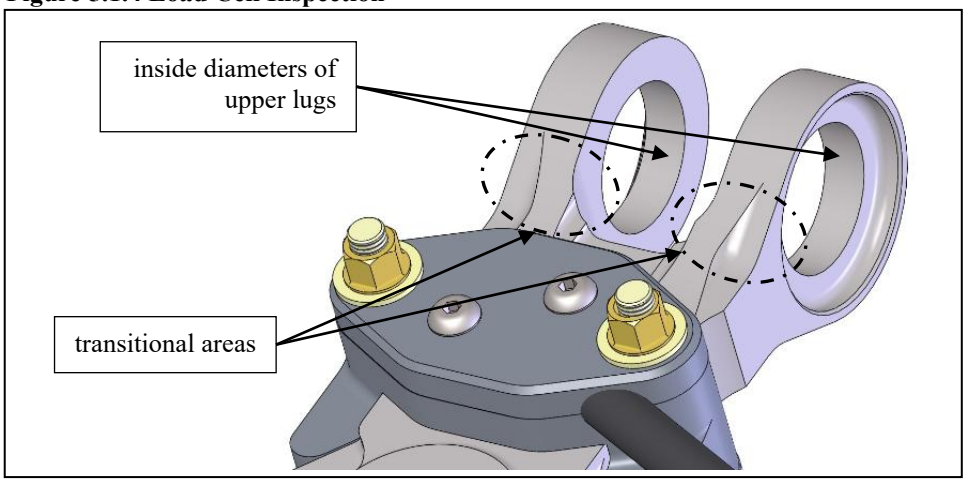

e. Inspect the flanged DU bearings (1.2) of the Gimbal (1.1) that interface with the Gimbal Shaft. As these bearings wear, the low-friction PTFE layer is removed, exposing the copper layer below (ref. Figure 5.1.5). Across the width of the bearing surface, no more than 50% should be the exposed copper layer.

Figure 5.1.5 Gimbal DU Bearing Inspection Criteria

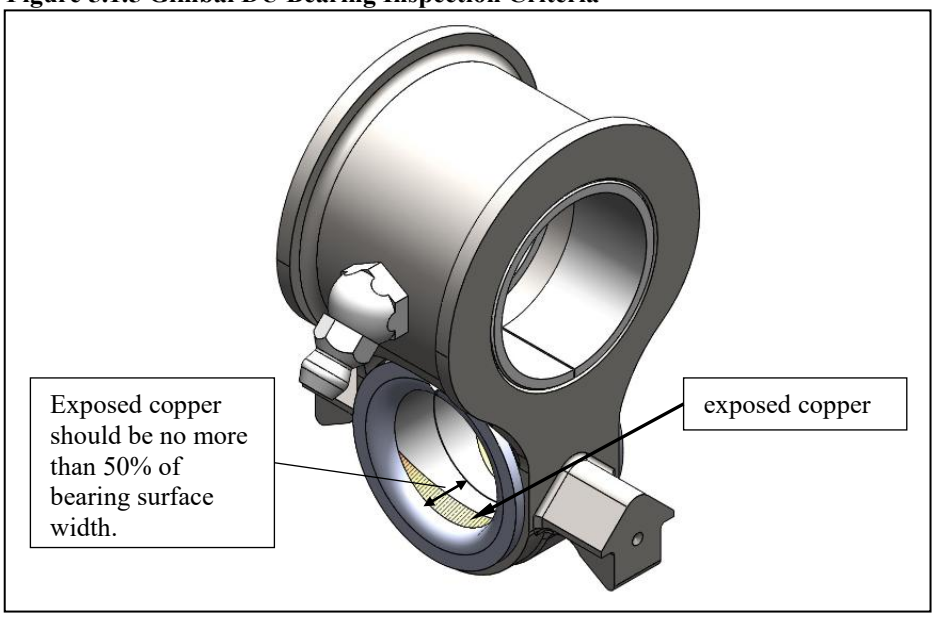

f. Replace worn or damaged parts. If DU bearings require replacement (refer to Section 5.2 for further disassembly instructions), press in with wet zinc chromate primer (TTP-1757 or equivalent) applied to the inside diameter of the mating hole.

g. Re-assemble the load cell to the Gimbal per Section 25.17.

5.1 Annual/100 Hour Inspection continued

Special Inspection for Torsional Loads

If the swing frame assembly is used with torsional loads (such as a fertilizer slinger bucket) that are attached directly to the cargo hook via a spreader bar (without any additional restraints), perform additional inspections as specified in this below.

WARNING

Loads attached to the cargo hook with a spreader bar (such as a typical fertilizer bucket) cause the swing frame assembly to react high torsional loads. Repetitive high torsional loads are damaging to the swing frame assembly and require an additional inspection as defined in the following step.

15. Disassemble the upper pivoting joint of the swing frame assembly to remove and inspect the Gimbal Assembly per the following.

    a. Remove the cotter pin (8), nut (9), Shaft Cap (5) and remove the bolt (10) and the other Shaft Cap.

    b. Remove the Pivot Shaft while supporting each Swing Frame Half.

    c. Remove the Gimbal Assembly (1) and the Thrust Washers (15).

    d. Perform a visual inspection for cracks in the Gimbal (1.1), with specific attention on the transitional areas (on both sides) as identified in Figure 5.1.6 including around the base of the arrow shaped feature.

Figure 5.1.6 Gimbal Assembly Inspection

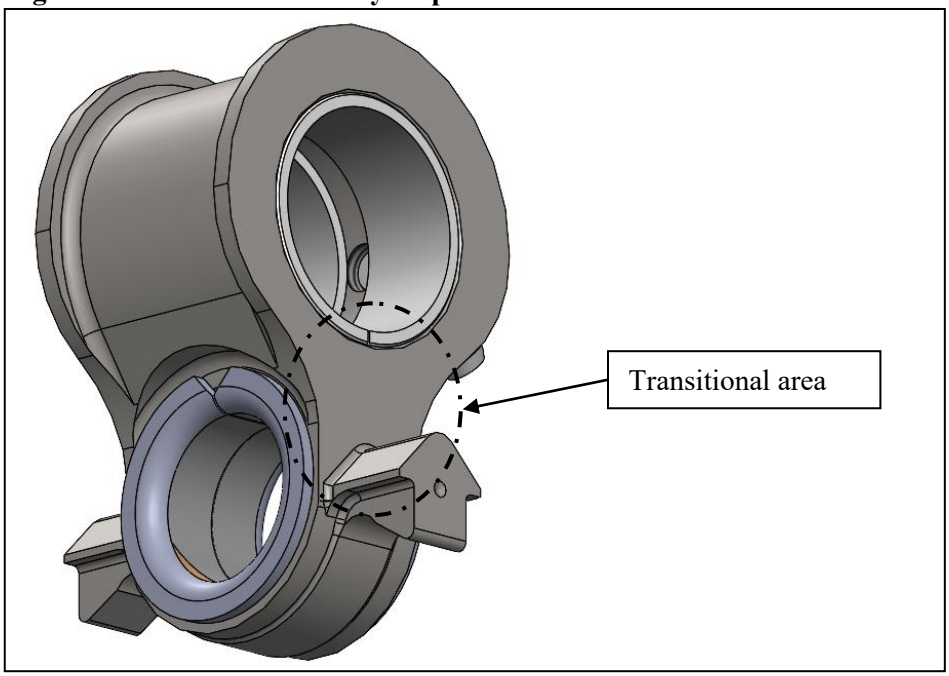

5.1 Annual/100 Hour Inspection continued

If the fuel drain guard is installed perform the following.

1. Inspect all fuel drain guard parts for corrosion, gouges, nicks, and dents. If depth of corrosion pits, gouges, nicks, or dents exceed .060", remove and replace damaged part(s).
2. Inspect Guard for damage that causes lever to bind or rub. Remove and replace Guard if it is obstructing free operation of lever.
3. Inspect for fuel leakage. If leakage is noted, re-apply sealant to Retainer as described in Section 25. Refer to Airbus Helicopters maintenance instructions for other possible causes.

5.2 5 Year/1000 Hour Inspection

Every 5 years or 1000 hours of external load operations, whichever comes first, remove the external components from the aircraft and disassemble per the following. A six-month or 100-hour grace period can be applied if needed for maintenance scheduling convenience only. No extension to maintenance is allowed beyond this tolerance grace period.

Remove the suspension by removing the quick release pins at the cable attachments to the shackle assemblies at the landing gear cross tubes and disconnecting the electrical harnesses, ground strap and manual release cable connections at the aircraft. Remove the four Shackle Assemblies from the aircraft hardpoints.

Disassemble per the following steps. For item numbers in parentheses ( ), refer to Figure 5.2.1 through Figure 5.2.3 for Swing Suspension parts and Figure 5.2.4 for Shackle Assembly parts. Part numbers are listed in Table 5.2.1.

1. Remove the four suspension cable assemblies from the swing frame feet by removing the cotter pin (35), nut (34), two washers (33) and bolt (31). Remove the Standoff Bushings (32).
2. Separate the Load Cell (16) and Cargo Hook (28) from the Swing Frame by removing the cotter pin (22), nut (21), washer (20), and Shaft Retaining Bushing (18) and sliding the Gimbal Shaft (17) and bolt out with the other Shaft Retaining Bushing (18).
3. At each foot of the swing frame remove the nut (7) and bolt (12) that secure the rod end fittings (13) to the swing frame feet.
4. At the upper pivoting joint of the swing frame remove the cotter pin (8) and nut (9) from the end of the bolt (10) and remove the Shaft Cap (5).
5. Slide the Swing Frame Half (3) off of the Pivot Shaft (4) and remove the bumper (6), thrust washers (15), and Gimbal Assembly (1.1, 1.2, 1.3).
6. Slide the Pivot Shaft out of the opposite Swing Frame Half (3) and remove the other Shaft Cap (5) and bolt (10).
7. Separate the Cargo Hook (28) and Hook Bumper (23) from the Load Cell by removing the cotter pin (8), nut (27), and washers (25, 26) from the end of the Attach Bolt (24) and slide the Attach Bolt out, removing the other washer (25).
8. Separate the Gimbal Assembly (36.1, 36.2, 36.3) from each suspension cable assembly by removing the cotter pin (35), nut (34), washer (33), and bolt (39).
9. Remove spiral wrap from around the frame tubes.
10. Remove bushings if it is necessary that they be replaced. All self-lubricating bushings use an interference fit to hold them in place. Use an arbor press or similar to press the bushings out of the bore they are mounted in. Do NOT use heat.

5.2 5 Year/1000 Hour Inspection continued

Figure 5.2.1 Suspension Cable to Swing Frame Attachment Hardware

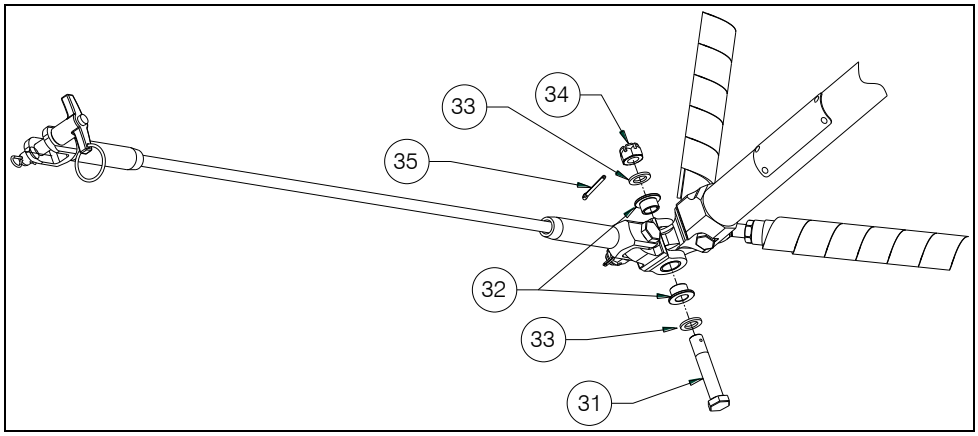

Figure 5.2.2 Swing Frame Assembly P/N 232-145-01 Parts

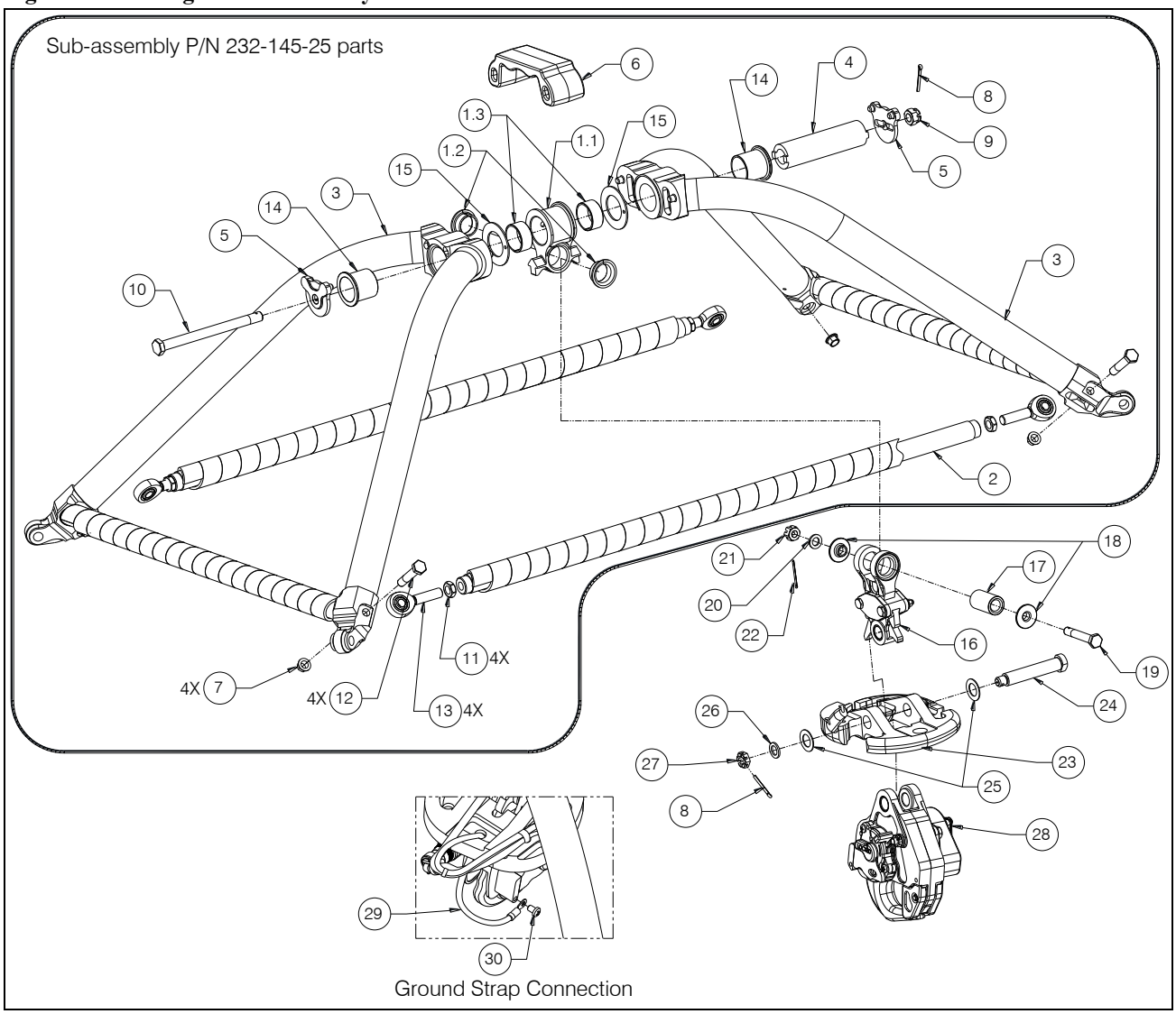

5.2 5 Year/1000 Hour Inspection continued

Figure 5.2.3 Suspension Cable Parts

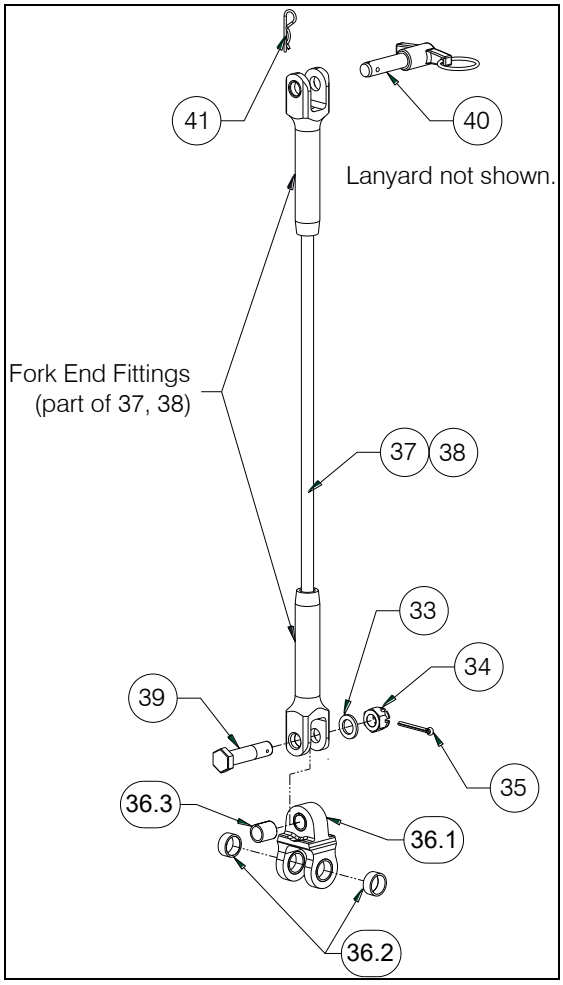

Figure 5.2.4 Shackle Assembly 232-137-01 Parts

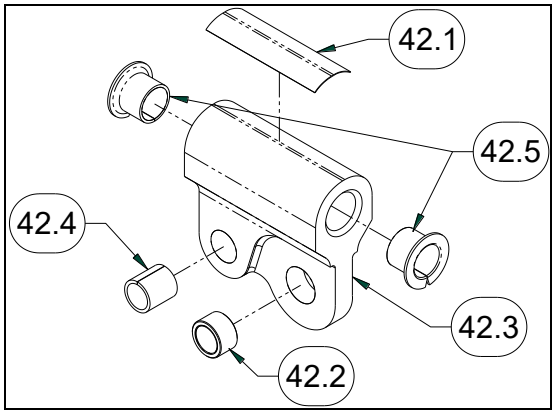

5.2 5 Year/1000 Hour Inspection continued

Table 5.2.1 Swing Suspension Parts List

Item	Part No.	Description	Qty
1[1]	232-143-01	Load Cell Gimbal Assembly	1
1.1	290-841-00	Gimbal	1
1.2	517-046-00	Flanged DU Bearing	2
1.3	517-056-00	DU Bearing	2
1.4[3]	518-003-00	Grease Fitting	1
2	235-116-00	Frame Strut Weldment	2
3	235-117-00	Swing Frame Half	2
4	290-842-00	Pivot Shaft	1
5	290-843-00	Shaft Cap	2
6	290-862-00	Bumper	1
7	510-104-00	Nut	4
8	510-178-00	Cotter Pin	2
9	510-440-00[9]	Nut	1
10	510-506-00	Bolt	1
11	510-510-00	Jam Nut	4
12	510-762-00	Bolt	4
13	517-055-00	Spherical Rod End	4
14	517-057-00	Flanged DU Bearing	2
15	517-058-00	Thrust Bearing	2
16	210-249-03	Load Cell	1
17	290-739-00	Gimbal Shaft	1
18	290-740-00	Retaining Bushing - Shaft	2
19	510-443-00	Bolt	1
20	510-220-00	Washer	1
21	510-320-00	Nut	1
22	510-115-00	Cotter Pin	5
23	290-774-00	Hook Bumper	1
24	290-775-00	Long Attach Bolt	1
25	510-183-00	Washer	2
26	510-174-00	Washer	1
27	510-170-00	Nut	1
28	528-023-01	Cargo Hook	1
29	270-126-00	Ground Strap	1
30	510-391-00	Screw	1
31	510-439-00	Bolt	4
32	290-749-00	Standoff Bushing	8
33	510-221-00	Washer	12
34	510-718-00[8]	Nut	8
35	510-178-00	Cotter Pin	8

5.2 5 Year/1000 Hour Inspection continued

Table 5.2.1 Swing Suspension Parts List continued

Item	Part No.	Description	Qty
36[1]	232-142-00	Lower Attach Gimbal Assembly	4
36.1	290-746-00	Gimbal	1[2]
36.2	517-048-00	DU Bearing	2[2]
36.3	517-016-00	DU Bearing	1[2]
37	232-177-00[6]	Forward Suspension Cable	2
38	232-178-00[6]	Aft Suspension Cable	2
39	510-438-00	Bolt	4
40	290-851-00	Quick Release Pin	4
41	514-048-00	Safety Pin	4
42[1]	232-137-01[7]	Shackle Assembly	4
42.1	215-396-00	Shackle Assembly Placard	1[2]
42.2	290-750-00	Attach Fitting Bushing	1[2]
42.3	290-850-00	Shackle	1[2]
42.4	517-016-00	DU Bearing	1[2]
42.5	517-047-00	Flanged DU Bearing	2[2]
43[3]	270-107-00	Electrical Release Cable	1

Notes:

1. Item not shown assembled.
2. Quantity is per assembly.
3. Not shown.
4. Load Cell P/N 210-249-03 supersedes P/Ns 210-249-00, 210-199-01, and 210-199-00.
5. Swing Frame Assembly P/N 232-145-25 is comprised of items 1 through 15.
6. Service Bulletin 159-014-00 introduced Swing Frame Replacement Kit P/N 210-218-00 to Cargo Swing Suspension System P/N 200-280-00. This Swing Frame Replacement Kit replaced the original Swing Frame Assembly with P/N 232-145-25 but retained the original Forward and Aft Suspension Cables (P/Ns 232-140-00 and 232-141-00) in lieu of using P/Ns 232-177-00 and 232-178-00. Refer to Section 5.2.1 for identification and inspection of P/Ns 232-140-00 and 232-141-00.
7. The original Forward and Aft Suspension Cables require that Shackle Assembly P/N 232-137-00 be installed. Refer to Section 5.2.1 for identification and inspection of P/N 232-137-00.
8. Nut P/Ns 510-440-00 and 510-226-00 are optional to P/N 510-718-00.
9. Nut P/N 510-718-00 is optional

5.2 5 Year/1000 Hour Inspection continued

Return the Load Cell Assembly (P/N 210-249-03) to the factory for inspection and calibration. The factory will inspect the condition of the load cell and perform acceptance test procedures including calibration and zero balance, repairing as necessary.

In addition, carefully inspect, and if necessary, repair or replace the detail parts in accordance with the instructions in Table 5.2.2. Inspect the parts in a clean, well-lit room.

Overhaul Kit P/N 212-040-00 is recommended to use for re-assembly of the swing suspension. The overhaul kit contains fasteners, bushings and other recommended items to be replaced. The cargo hook has its own overhaul kit, refer to its CMM.

Table 5.2.2 Swing Suspension Inspection Criteria

Seq	Component	Inspection Criteria & Limit	Repair Action	Finish	Recommended replacement at overhaul
1.	Gimbal (1.1), Gimbal (36.1)	Surface cracks – inspect under illuminated magnification (minimum 2X / 4 diopter).	None. Cracks of any size are cause for part replacement.	N/A	No
2.	Frame Strut Weldment (2)	Dents, gouges, and scratches – 0.020 in. (0.51 mm) deep.	Blend at 10:1 ratio as required to provide smooth transitions.	Protect affected surfaces with MIL-PRF-23377 Type 1 primer or equivalent and MIL-PRF-85285 Type 1 coating or equivalent.	No
		Surface cracks – inspect under illuminated magnification (minimum 2X / 4 diopter).	None. Cracks of any size are cause for part replacement.	N/A	
3.	Swing Frame Weldment (3)	Dents, gouges, and scratches – 0.020 in. (0.51 mm) deep.	Blend at 10:1 ratio as required to provide smooth transitions.	Protect affected surfaces with MIL-PRF-23377 Type 1 primer or equivalent and MIL-PRF-85285 Type 1 coating or equivalent.	No
		Surface cracks – inspect under illuminated magnification (minimum 2X / 4 diopter).	None. Cracks of any size are cause for part replacement.	N/A	
		Bent lateral tube, gap measured along a straight edge is greater than .35” (see figure below).	None.	N/A	
		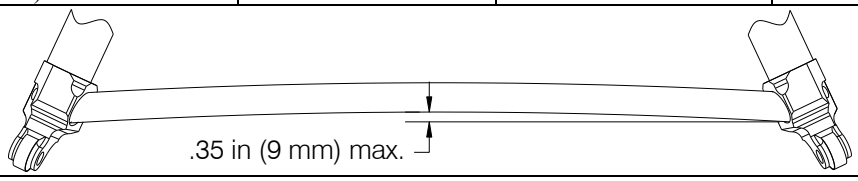			

5.2 5 Year/1000 Hour Inspection continued

Table 5.2.2 Swing Suspension Inspection Criteria continued

Seq	Component	Inspection Criteria & Limit	Repair Action	Finish	Recommended replacement at overhaul
4.	Pivot Shaft (4)	Wear on outside diameter, diameter less than 0.990" (25.1 mm).	None	N/A	No
5.	Shaft Cap (5)	Dents, nicks, cracks, gouges, scratches and corrosion – 0.060 in. (1.52 mm) deep	Blend at 10:1 ratio as required to provide smooth transitions.	Passivate per AMS-QQ-P-35 or ASTM A967.	No
6.	Bumper (6)	Gouges and scratches greater than .060" deep. Splitting.	None.	N/A	No
7.	DU Bearing (1.2, 1.3, 15, 36.2, 36.3, 42.4, 42.5)	Wear – more than 50% copper showing.	None	N/A	Yes
8.	Rod End (13)	Wear on or elongation of inside diameter of spherical bearing, diameter greater than .330 in. (8.4 mm). Binding of spherical bearing in its housing.	None	N/A	No
9.	DU Thrust Washer (15)	Wear on side facing Gimbal – more than 50% copper showing.	None.	N/A	Yes
10.	Load Cell Assembly (16)	Dents, gouges, and scratches greater than .020 in. deep in the load link.	Blend at 10:1 ratio as required to provide smooth transitions.	Passivate per AMS-QQ-P-35 or ASTM A967.	No
		Elongation of or wear on inside diameter of upper lugs, diameter greater than .759 in. (19.3 mm). Galling, pitting on inside diameter.	None.	N/A	
		Dents, gouges, and scratches greater than .060 in. (1.5 mm) deep in the Covers.	Blend at 10:1 ratio as required to provide smooth transitions.	Apply conversion coating (MIL-DTL-5541) to affected Cover surfaces.	
		Wear on ID of bushing - 0.520 in. (13.2 mm)	None.	N/A	
11.	Gimbal Shaft (17)	Wear on OD - .732 in. (18.6 mm) Galling, pitting.	None	N/A	No
12.	Retaining Bushing (18)	Wear on shoulder OD - .420 in. (10.7 mm)	None	N/A	No
13.	Hook Bumper (23)	Gouges and scratches greater than .060 in (1.5 mm) deep.	None	N/A	No

5.2 5 Year/1000 Hour Inspection continued

Table 5.2.2 Swing Suspension Inspection Criteria continued

Seq	Component	Inspection Criteria & Limit	Repair Action	Finish	Recommended replacement at overhaul
14.	Attach Bolt (24)	Wear on OD - .495 in. (12.6 mm)	None	N/A	No
15.	Suspension Cable (37, 38) Fork End Fittings	Wear on ID of clevis holes - 0.397 in. (10.1 mm)	None	N/A	No
		Dents, gouges and scratches – 0.020 in. (0.51 mm) deep	Blend at 10:1 ratio to provide smooth transitions.	Parts are 303 stainless steel, no touch up finish required.	No
		Surface cracks – inspect under illuminated magnification (minimum 2X / 4 diopter).	None	N/A	No
16.	Suspension Cable (37, 38) Wire Rope	Inspect for damage as detailed in 100 Hour/Annual Inspection	None	N/A	No
17.	Quick Release Pin (40)	Wear on OD - 0.362 in. (9.2 mm)	None	N/A	No
18.	Shackle (42.3)	Dents, gouges and scratches – 0.020 in. (0.51 mm) deep	Blend at 10:1 ratio to provide smooth transitions.	Protect affected surfaces with MIL-PRF-23377 Type 1 epoxy primer or equivalent and MIL-PRF-85285 Type 1 coating or equivalent.	No
19.	All remaining nuts, bolts, cotter pins, washers	Wear, corrosion or deterioration.	None	N/A	Yes
20.	S/N Plate	Damaged or illegible	None	N/A	No

5.2 5 Year/1000 Hour Inspection continued

Swing Frame Re-assembly

Re-assemble the suspension frame per the following.

1. Install replacement self-lubricating bushings with wet zinc chromate primer (TTP-1757 or equivalent) applied to the inside diameter of the mating bore.
2. Apply a light film of grease (Mobilgrease 28 is recommended) to the outside diameter of the Pivot Shaft (4) and insert it through one frame half, thrust washer* (15), Gimbal Assembly (1), thrust washer* (15) and through second frame half. Do not fully seat frame halves yet.

   *Ensure Teflon impregnated wear surfaces (darker sides) of thrust washers are facing gimbal.
3. Rotate the Pivot Shaft so that the raised "keys" at each end are horizontal.
4. Align the rod ends (13) to seat in the pockets of the swing frame feet.
5. Before fully seating and securing the frame halves together position the bumper (6) in between them.
6. Capture each end of the Pivot Shaft with Shaft Caps (5) and insert bolt (10) through, and thread the nut (9) on. Ensure that the rod ends are aligned with the holes in both feet.
7. Torque the nut (9) to 20 ft-lbs. Rotate the nut to the next castellation, not to exceed 30 ft-lbs.
8. Install and secure cotter pin (8).
9. Secure rod ends to frame feet with bolt (12) and nut (7). Torque to 8 – 12 ft-lbs.
10. Ensure the rod ends at each end of the frame struts are parallel, i.e.- the rod ends should be able to be rotated within the limits of the pockets in the frame feet. If necessary, loosen a jam nut (11), rotate the strut so the tightened rod end is against the pocket, rotate other rod end in the same direction (to be parallel), and tighten its jam nut.
11. Attach the Load Cell (16) to the Gimbal Assembly (1) per section 25.17.
12. Attach the Cargo Hook (28) and Hook Bumper (23) to the Load Cell per section 25.17.
13. Apply grease (Mobilgrease 28 is recommended) to the holes of the Fork End Fittings of the Forward and Aft Suspension Cable Assemblies (37, 38).

5.2 5 Year/1000 Hour Inspection continued

14. Assemble the Gimbal Assemblies (36) onto the Fork End Fittings of the suspension cable assemblies with bolt (39), washer (33), and nut (34).
15. Tighten nut (34) to finger tighten then rotate to next castellation if necessary to insert cotter pin. Ensure the Gimbal Assembly pivots freely on the bolt (back off to previous castellation if it does not). Install cotter pin (35).
16. Apply grease (Mobilgrease 28 is recommended) to the shank of the bolts (29).
17. Fasten the Gimbal Assemblies of the two longer Aft Suspension Cable Assemblies onto the aft feet of the Swing Frame Assembly and the two shorter Aft Suspension Cable Assemblies onto the forward feet of the Swing Frame Assembly (reference Figure 5.2.5 for orientation).

    At each joint, assemble with bolt (31), washers (33), Standoff Bushings (32), and nut (34). Tighten nut to 95-110 in-lb and rotate to next castellation to insert cotter pin (35). Ensure each Gimbal rotates freely on the frame foot.

Figure 5.2.5 Swing Frame Orientation

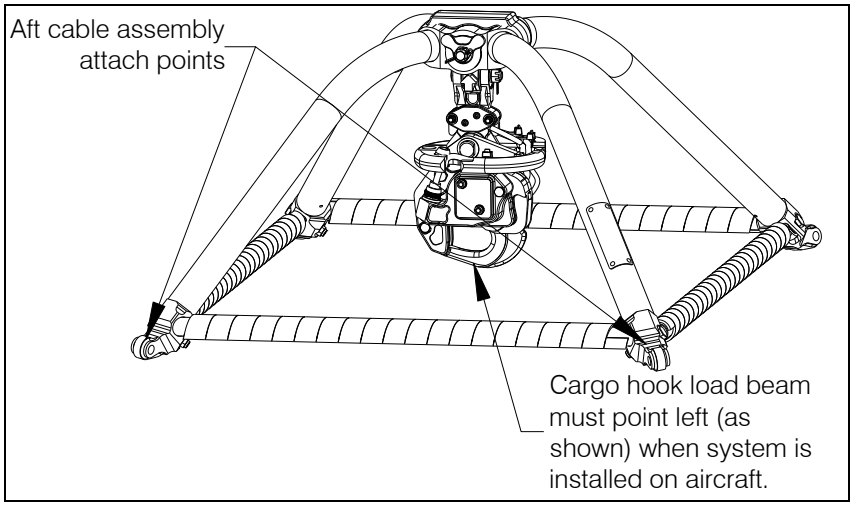

18. Re-install the suspension system on the aircraft per Section 25.17.

5.2.1 Inspection of Suspension Cables and Shackle Assemblies of 200-280-00

Forward Suspension Cable P/N 232-140-00 and Aft Suspension Cable P/N 232-141-00 and Shackle Assembly P/N 232-137-00 were included with the original Cargo Swing Suspension System P/N 200-280-00 and were not replaced by incorporating Service Bulletin 159-014-00. These P/Ns are addressed in this section. Skip this section if P/N 200-280-00 (discontinued in 2005) was never installed.

Disassembly and re-assembly are the same as P/Ns 232-177-00 and 232-178-00, except do not typically disassemble items 2 and 6 from item 4 unless damage is observed. These assemblies are no longer supported by Onboard Systems and must be replaced by the Suspension Cables listed in Section 5.2 if items 2, 4, or 6 are outside of limits. If Suspension Cables are replaced, the Shackle Assemblies P/N 232-137-00 must be replaced with P/N 232-137-01.

Figure 5.2.6 Suspension Cable P/N 232-140-00/232-141-00 Parts

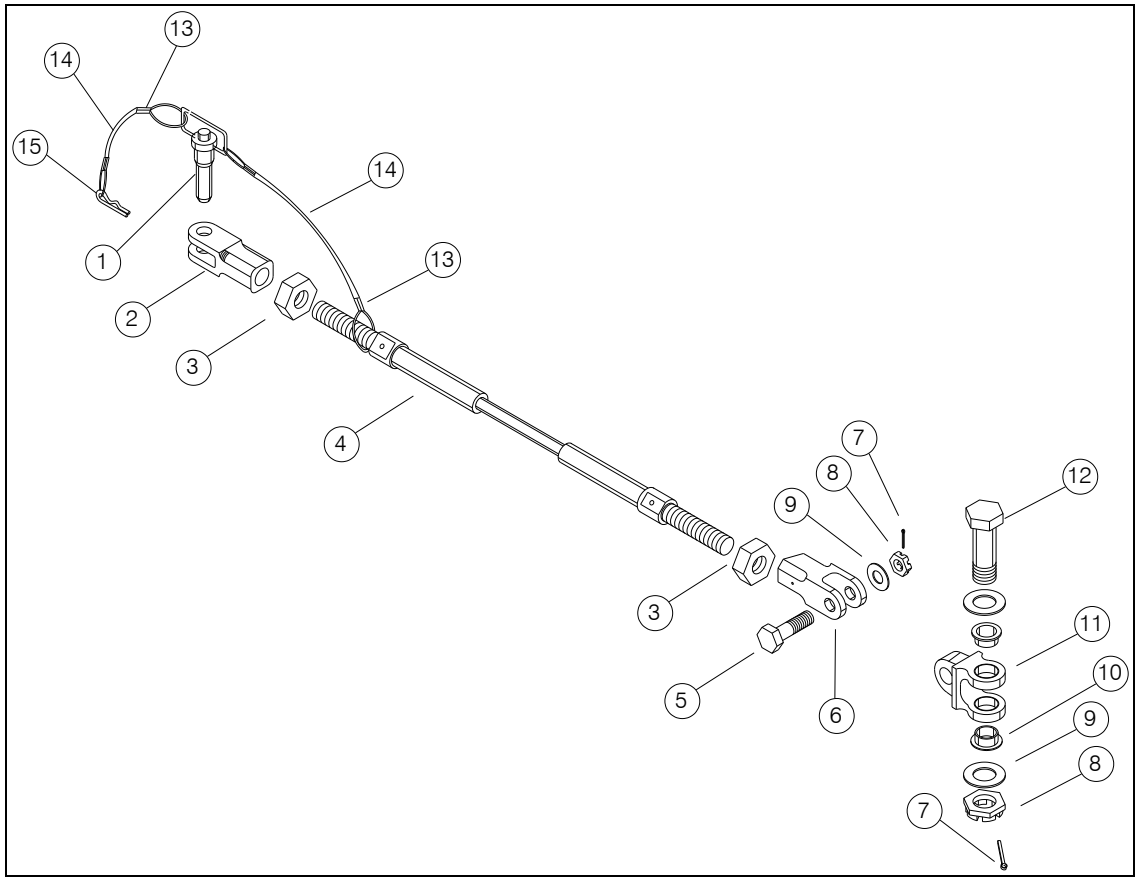

Table 5.2.3 Suspension Cable 232-140-00 and 232-141-00 Parts List

Item	Part Number	Description	Qty
1	290-784-00	Quick Release Pin	1
2	290-743-00	Clevis Cable End	1
3	510-444-00	1/2" Jam Nut	2
4	232-135-00*	Forward Attach Cable	1
5	510-438-00	Bolt	1
6	290-747-00	Lower Cable End	1
7	510-178-00	Cotter Pin	2
8	510-440-00	3/8" Castellated Nut	2
9	510-221-00	Washer	3
10	290-749-00	Standoff Bushing	2
11	232-142-00	Gimbal Assembly	1
12	510-439-00	Bolt	1
13	531-016-00	Crimp Sleeve	4
14	531-015-00	Lanyard Cable	2
15	510-464-00	Hitch Pin	1

*Aft Attach Cable P/N is 232-136-00, identical to P/N 232-135-00 except length.

Table 5.2.4 Suspension Cable 232-140-00 and 232-141-00 Inspection

Seq	Component	Inspection Criteria & Limit	Repair Action	Finish	Recommended replacement at overhaul
1.	Cable End Fittings (2, 6)	Wear on ID of clevis holes of item 2 – 0.41 in. (10.4 mm) Wear on ID of clevis holes of item 6 – 0.397 in. (10.1 mm)	None	N/A	No
		Dents, gouges and scratches – 0.020 in. (0.51 mm) deep	Blend at 10:1 ratio to provide smooth transitions.	Parts are 15-5 stainless steel, no touch up finish required.	No
		Surface cracks – inspect under illuminated magnification (minimum 2X / 4 diopter).	None	N/A	No
2.	Attach Cable (4)	Inspect for damage of wire rope as detailed in 100 Hour/Annual Inspection	None	N/A	No
		Dents, gouges and scratches in end fittings – 0.020 in. (0.51 mm) deep	Blend at 10:1 ratio to provide smooth transitions.	Parts are 15-5 stainless steel, no touch up finish required.	No
3.	Quick Release Pin (1)	Wear on OD - 0.38 in. (9.6) mm)	None	N/A	No
4.	Gimbal Assembly (11)	Refer to Table 5.2.2, items 36.1 and 36.2			No
5.	Nuts, bolts, cotter pins, washers, lanyards, etc.	Wear, corrosion or deterioration.	None	N/A	Yes

Shackle Assemblies P/N 232-137-00 (along with the Forward Suspension Cable P/N 232-140-00 and Aft Suspension Cable P/N 232-141-00) were included with Cargo Swing Suspension System P/N 200-280-00. This assembly P/N is addressed below.

Figure 5.2.7 Shackle Assembly P/N 232-137-00 Parts

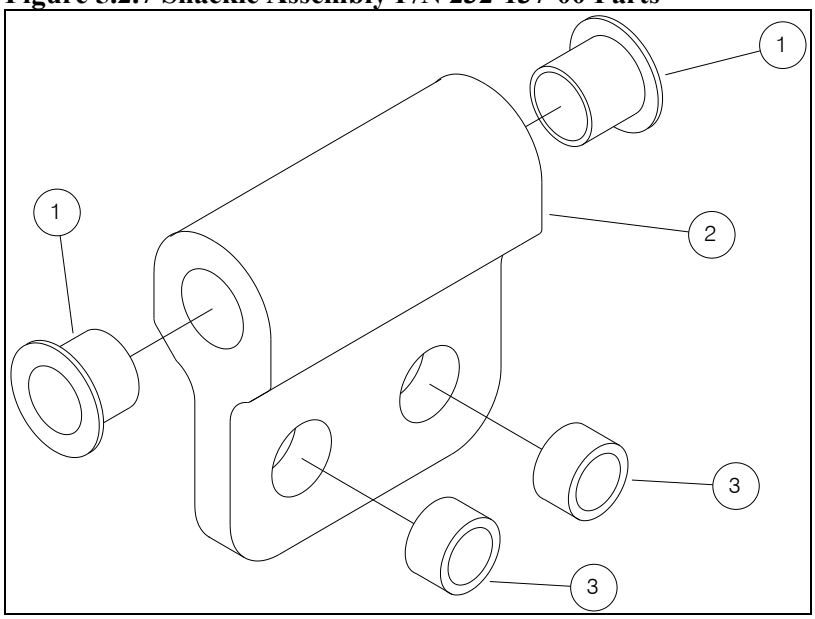

Table 5.2.5 Shackle Assembly 232-137-00 Parts List

Item	Part Number	Description	Qty
1	517-047-00	DU Bearing	2
2	290-742-00	Shackle	1
3	290-750-00	Bushing	2

Table 5.2.6 Shackle Assembly 232-137-00 Inspection Criteria

Seq	Component	Inspection Criteria & Limit	Repair Action	Finish	Recommended replacement at overhaul
1.	DU Bearing (1)	Wear – more than 50% copper showing.	None	N/A	Yes
2.	Shackle (2)	Dents, gouges and scratches – 0.020 in. (0.51 mm) deep	Blend at 10:1 ratio to provide smooth transitions.	Protect affected surfaces with MIL-PRF-23377 Type 1 epoxy primer or equivalent and MIL-PRF-85285 Type 1 coating or equivalent.	No
3.	Bushing (3)	Wear on ID – 0.41 in. (10.4 mm)	None	N/A	Yes

5.3 Cargo Hook Overhaul Schedule

Time Between Overhaul (TBO) for the cargo hook: 5 years or 1000 hours of external load operations, whichever comes first.

NOTICE

*Hours of external load operations should be interpreted to be **(1)** anything is attached to the primary cargo hook (whether a useful load is being transported) and **(2)** the aircraft is flying. If these conditions are **NOT** met, time does **NOT** need to be tracked.*

Overhaul instructions for the cargo hook are contained in Component Maintenance Manual 122-005-00. Contact Onboard Systems for guidance to locate authorized overhaul facilities.

THIS PAGE INTENTIONALLY LEFT BLANK

Section 11
Placards and Markings

11.1 Placards

The 200-280-01 Cargo Hook Swing Suspension System Kit includes the following placards shown in Table 11.1.

Table 11.1 Cargo Hook Suspension System Placards

Placard part number and appearance	Location
P/N 215-166-00 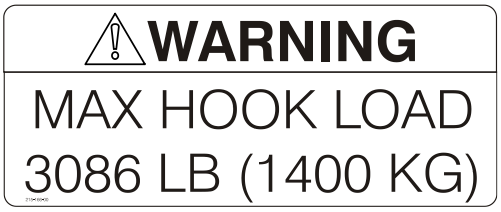 or P/N 215-168-00 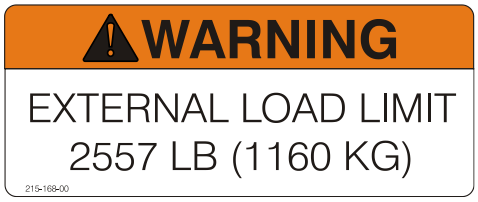 dependent on the model of AS350 on which the system is installed.	Located on the belly of the aircraft near the cargo hook suspension in clear view of the ground support personnel.
P/N 215-271-00 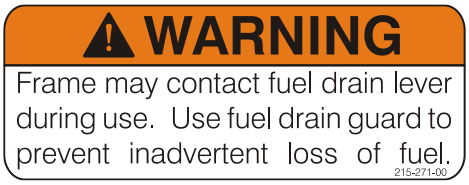	Located on the swing suspension frame near the serial number plate.
P/N 215-272-00 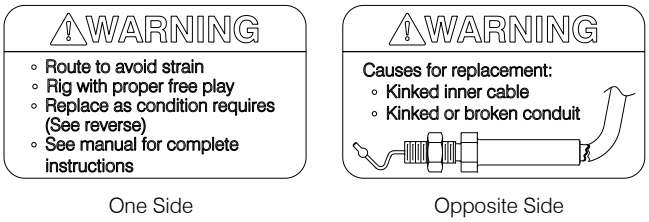 One Side Opposite Side	Located on the manual release cable, near the cargo hook.

THIS PAGE INTENTIONALLY LEFT BLANK

Section 12
Servicing
12.2 Lubrication Information

Lubrication of the Cargo Hook Swing Suspension system is required every 500 hours of operation. To obtain maximum life under severe duty conditions such as logging or seismic work, it is recommended to lubricate the Swing Suspension every 250 hours. Recommended types of lubricant are AeroShell 17 (MIL-G-21164) or Mobilgrease 28 (MIL-G-81322).

Lubricate the Cargo Hook Swing Suspension at points noted in Figure 12.1 and 12.2.

12.2 Lubrication Information, continued

Shackle Assembly Lubrication

Remove the Shackle Assemblies from the aircraft hard points and lubricate them and the mating fittings on the suspension cables as shown in Figure 12.1. This applies to all four Shackle Assemblies on the helicopter.

Figure 12.1 Shackle Assembly Lubrication

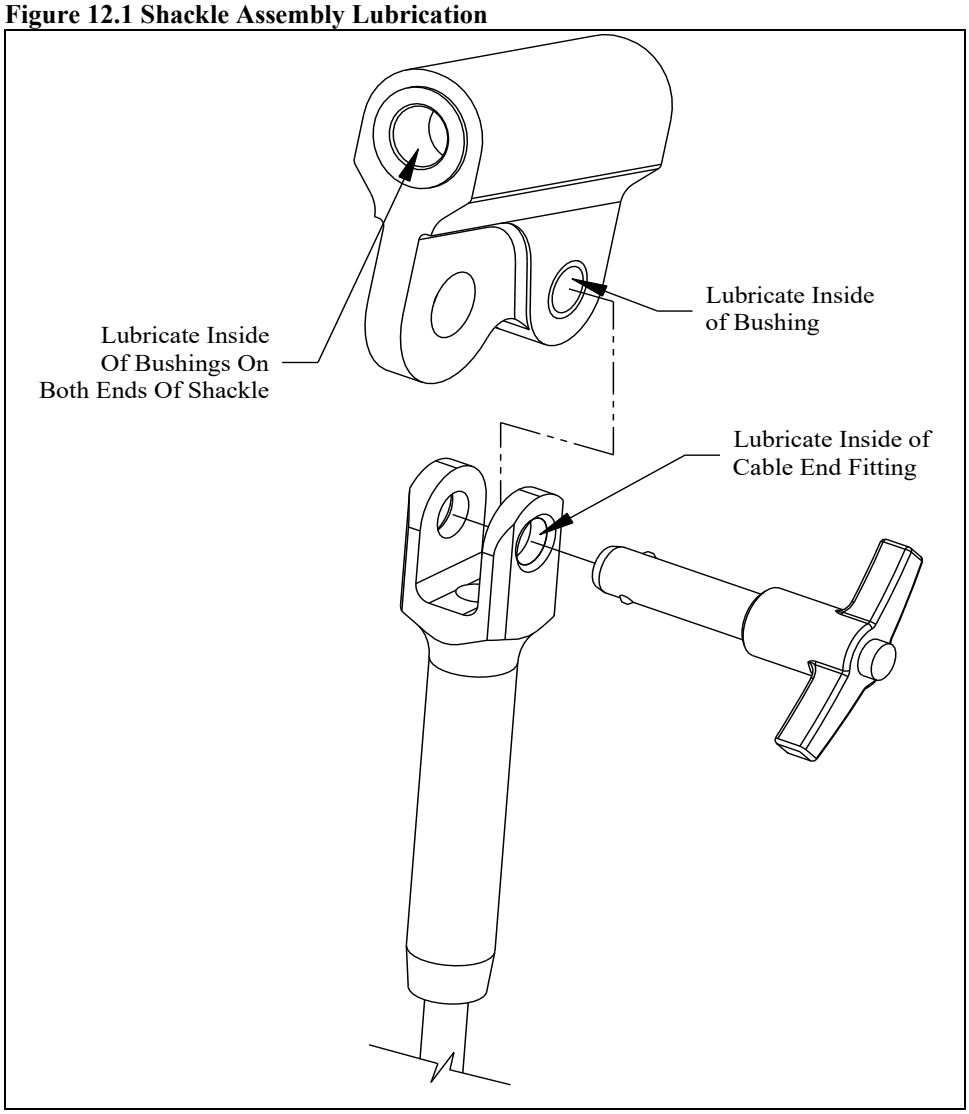

12.2 Lubrication Information, continued

Upper Gimbal Grease Fitting

Lubricate Upper Gimbal Assembly at the grease fitting located as shown in Figure 12.2. You may have to rotate the hook slightly to access the grease fitting.

Figure 12.2 Upper Gimbal Grease Fitting Lubrication

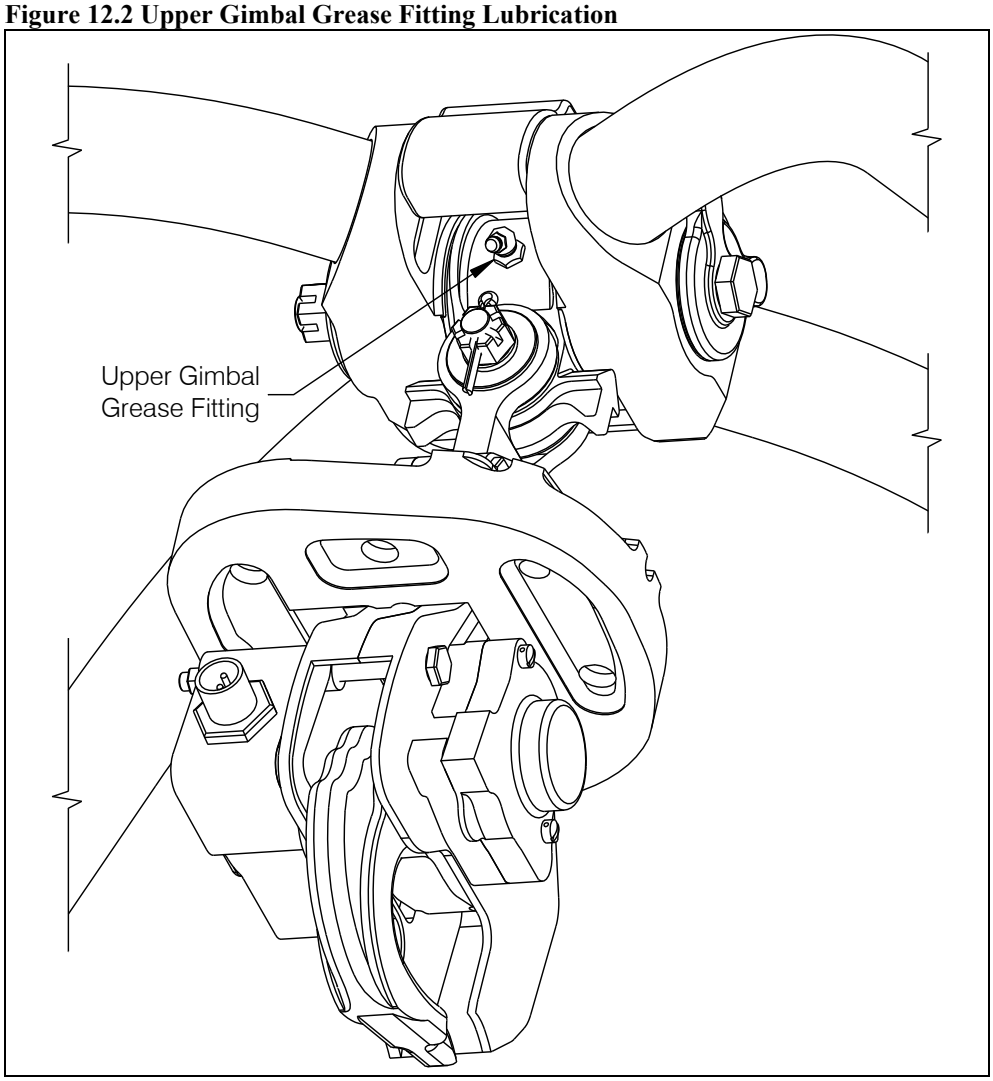

THIS PAGE INTENTIONALLY LEFT BLANK

Section 25
Equipment and Furnishings

WARNING

Un-commanded cargo hook release will happen if the manual release cable is improperly restrained. The cable must not be the stops that prevent the Cargo Hook from swinging freely in all directions. If the Cargo Hook loads cause the hook to strain against the manual release cable the swaged end of the cable may separate allowing the inner cable to activate the cargo hook manual release mechanism. The result is an un-commanded release. Ensure that no combination of cyclic stick or Cargo Hook position is restrained by the manual release cable.

Figure 25.1 Un-commanded Cargo Hook Release

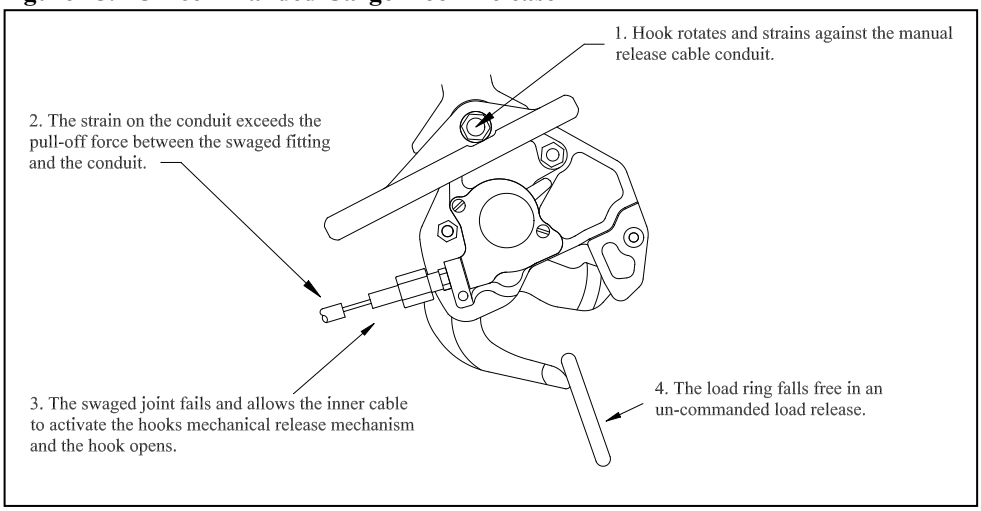

25.1 Cargo Hook Connector

Listed below is the pin out for the cargo hook connector.

Table 25.1 Cargo Hook Connector

Pin	*Function*
A	Ground
B	Positive

25.2 Description

The Cargo Hook Swing Suspension System consists of four primary subsystems, these are the Swing Suspension Assembly, Manual Release System, Electrical Release System, and Load Weighing System.

The Swing Suspension Assembly is attached to hard points and suspended below the belly of the helicopter by its four cable assemblies. The cable assemblies are attached to a frame assembly, which supports the cargo hook and a load cell through a gimbal (ref. Figure 25.2.1).

The Electrical Release System provides a means to release a cargo hook load through the use of a switch in the cockpit.

The Manual Release System provides an additional means to release a cargo hook load and consists of a release lever mounted to the collective that actuates a cable that is routed to the cargo hook.

The Load Weighing System consists of an indicator mounted within the cockpit, the load cell on the suspension, and associated wiring.

Figure 25.2.1 System Overview

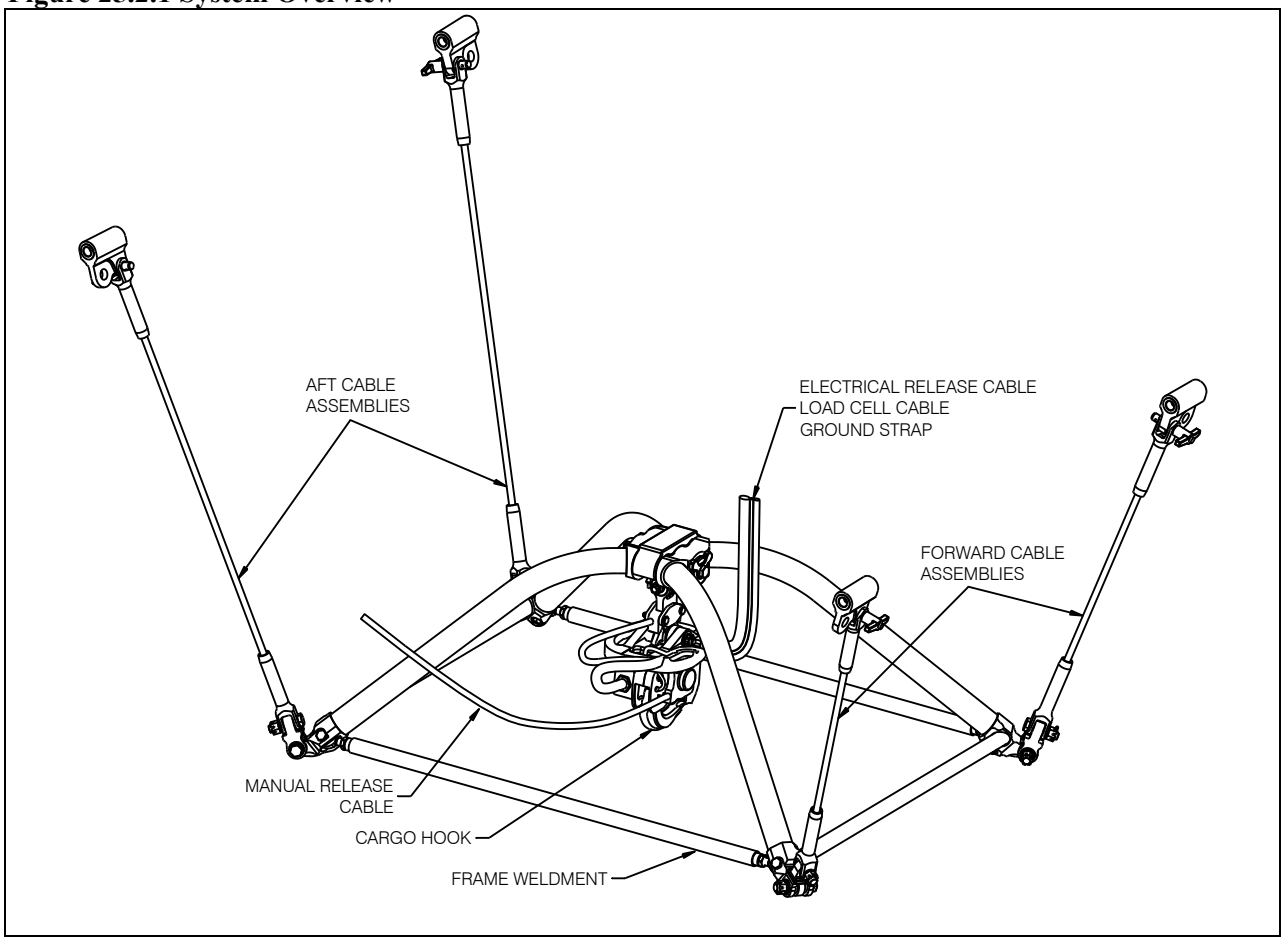

25.2 Description continued

The Fuel Drain Guard protects the fuel drain valve on AS350 helicopters from accidentally being opened. The fuel drain valve is located on the bottom of the fuel tank and extends below the belly of the helicopter. This location makes it vulnerable to damage or un-commanded fuel drainage on helicopters equipped with a cargo hook swing suspension. The most common occurrence of the cargo hook swing suspension striking the fuel drain valve happens when the helicopter lands on snow or on uneven terrain. The swing suspension has limited ground clearance and when the skid gear sinks into the snow, the swing suspension is pushed upward into the fuel drain valve, opening it and causing fuel to drain. The fuel drain valve can also be opened in flight by the swing suspension flying vertically due to aerodynamics when ferrying with no load or from recoil effects from releasing large cargo hook loads.

The Fuel Drain Guard provides mechanical protection for the fuel drain valve to prevent accidental contact while interfacing with Airbus Helicopters' existing valve, lever and control cable. The kit includes a Bracket, which replaces Airbus Helicopters' bracket and provides an optimized mounting point for the control cable.

Figure 25.2.2 Fuel Drain Guard Overview

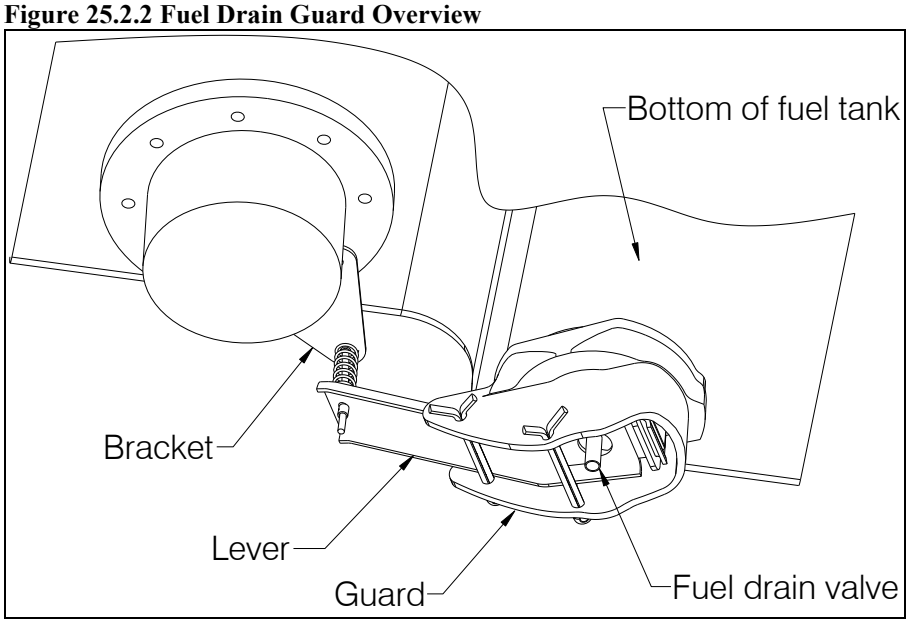

25.2 Description continued

Figure 25.2.3 shows the components of the Fuel Drain Guard installation.

Figure 25.2.3 Fuel Drain Guard Components

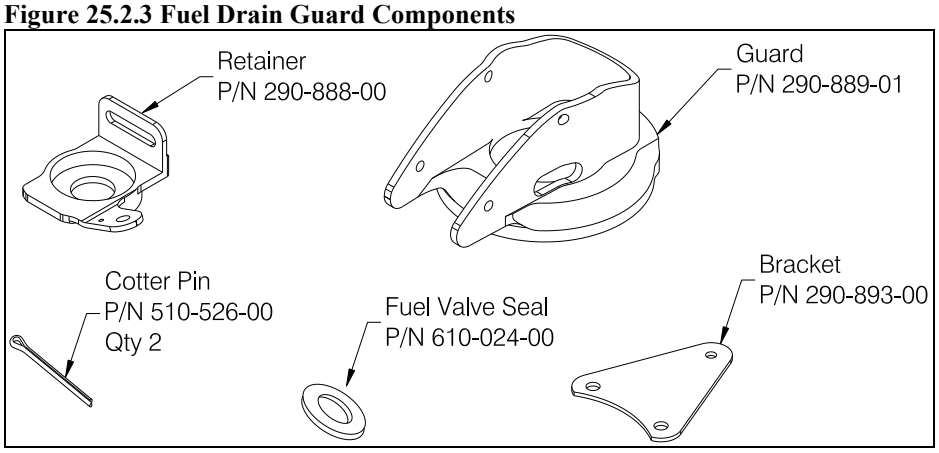

25.5 Component Weights

The weights and cgs of the systems are listed in Table 25.2.

Table 25.2 Component Weights and CGs

Item	Weight	Station
Removable Provisions*	30.0 lbs (13.6 kg)	133 in (3375 mm)
Fixed Provisions**	5.5 lbs (2.5 kg)	110 in (2794 mm)
Fuel Drain Guard***	0.40 lbs (.18 kg)	135 in. (3430 mm)
Total	35.9 lbs (16.3 kg)	129.5 in (3289 mm)

* The removable provisions include the swing suspension w/ hook, external manual release cable, and external electrical release cable. These items are easily removed if they are not needed on the helicopter's mission. Refer to Suspension System Removal in Section 25.16 for removal instructions.

** The fixed provisions are those items of the kit that remain on the aircraft. These include the fixed manual release cable, internal electrical wire harnesses, the load weigh indicator, and the miscellaneous brackets that support these items.

*** Included with newer kits (kits shipped after August 2010).

25.12 Storage Instructions

Clean the exterior Cargo Hook and suspension components thoroughly of excess dirt and grease with a rag before storing. Refer to the Cargo Hook CMM (doc. no. 122-005-00) for storage instructions for the cargo hook.

Package the suspension in a suitable fiberboard box and cushion the unit to prevent shifting. Seal the fiberboard box with tape and mark the box with the contents and date of packaging.

25.15 Troubleshooting

Table 25.3 is provided with the intention of isolating the cause of malfunctions within the system. Sections 25.16 and 25.17 include instructions for removing and replacing defective components. Refer to the appropriate Airbus Helicopters maintenance documentation for guidance on procedures relating to Airbus Helicopters parts that interface with this suspension system.

Table 25.3 Troubleshooting

MALFUNCTION	PROBABLE CAUSE	CORRECTIVE ACTION
Cargo hook does not operate electrically or manually.	Defective internal mechanism.	Remove and replace cargo hook (see sections 25.16 and 25.17).
Cargo hook does not operate electrically, manual cable release operates normally.	Open electrical circuit, faulty wiring, fuse, switch or solenoid.	Disconnect cable from electrical connector on cargo hook. Using multi-meter, check for 3.0 to 4.0 ohms between pins A and B of electrical connector (see note 1 below). If open indication is obtained, remove and replace cargo hook (see sections 25.16 and 25.17).
Cargo hook operates electrically, but not manually.	Defective manual release cable. Defective manual release system.	Inspect manual release cable and cable connection to Cargo Hook. Remove and replace cargo hook (see Sections 25.16 and 25.17).
Load beam fails to re-latch after being reset.	Defective latch mechanism.	Remove and replace cargo hook (see sections 25.16 and 25.17).
Force required to release hook with lever on collective exceeds 14 lbs.	High cable friction or friction in internal mechanism of hook.	Remove cable from hook and check cable and hook independently (see below) to determine cause.
With release cable disconnected at hook, the force required to move manual release lever on collective exceeds 6 lbs.	Kinks or wear in cable, frozen water in cable, debris or damage to cable quick disconnect fitting or lever mechanism on cyclic	Inspect individual components to isolate the problem. Remove and replace defective parts (see Sections 25.16 and 25.17 for remove and replace instructions for manual release cable).
Cargo hook manual release cable pull-off force exceeds 8 Lbs. (at the hook).	Friction in internal mechanism.	Remove and replace cargo hook (see Section 25.16 and 25.17)
Cargo hook fails to open or re-lock properly.	Failure to open or re-lock properly.	Remove and replace cargo hook (see Sections 25.16 and 25.17).
Fuse/circuit breaker opens when cargo hook is energized.	Short in the system, faulty wiring, fuse or solenoid.	Check for shorts to ground along length of wire harness (see note 2). Check solenoid resistance (see note 1), repair or replace defective parts.

Table 25.3 Troubleshooting continued

Load Weigh Indicator does not light up.	Faulty wiring or fuse.	Check the fuse (refer to Airbus Helicopters ICA) and wiring (see Note 2). If this doesn't help, remove and replace indicator per sections 25.16 and 25.17.
The displayed load on the Load Weigh Indicator is incorrect.	Incorrect calibration code.	Ensure the correct calibration code has been entered (see Note 3).
Indicator displayed load is not stable.	Dampening level is too low.	Adjust the dampening level to a higher number (see Note 4).
Indicator displayed load takes too long to change the reading when the load is changed.	Dampening level is too high.	Adjust the dampening level to a lower number (see Note 4).
Indicator does not change with changing hook loads.	Defective load cell, indicator failure or damaged wire harness.	Check for damaged wire harness (see note 2), remove and replace wire harness assembly or load cell (see sections 25.16 and 25.17).

Notes:

1. **Checking resistance at pins A and B.**

   Check for 3.0 to 4.0 ohms between pins A and B of electrical connector located on the cargo hook (see below).

Figure 25.15.1 Cargo Hook Electrical Connector

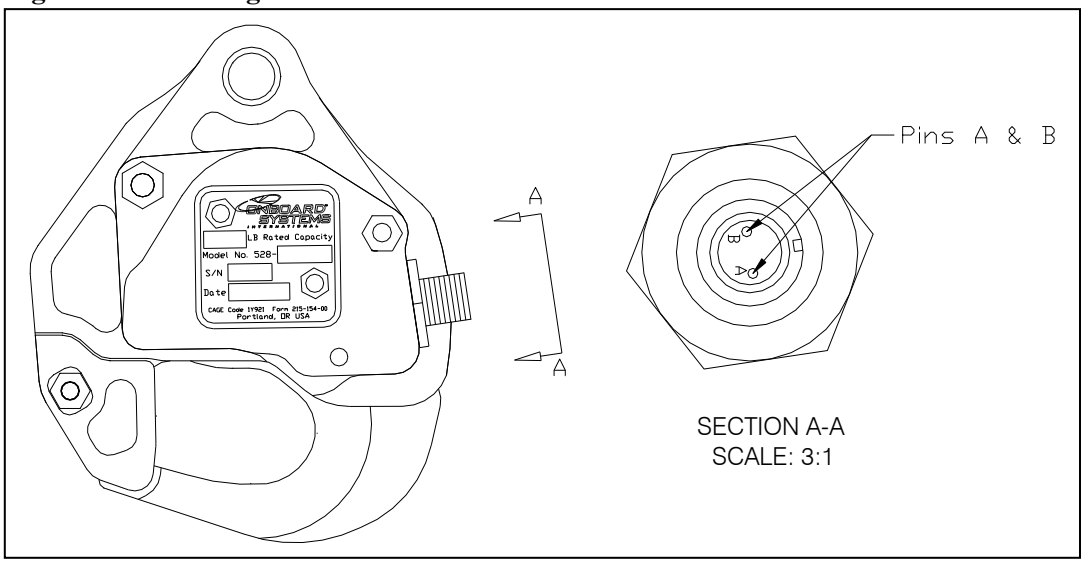

Table 25.3 Notes continued:

2. Checking Wire Harnesses.

As appropriate, before working on a circuit, e.g. - inspection, removal-installation of components, check that the aircraft system is not energized:

- "EXT. PWR. BAT." push-button is released.
- External power connector is not supplied
- Further precaution: remove the fuse(s) from the corresponding circuits (refer to Figure 25.15.3)

The wire harnesses are routed with and secured to existing wire bundles and are located approximately as shown below. Remove lower fairings to inspect wiring underneath the cabin floor. Inspect for general condition and chafing along length of wire runs. See Figure 25.15.3 for electrical schematic.

Figure 25.15.2 Wire Harness Routing

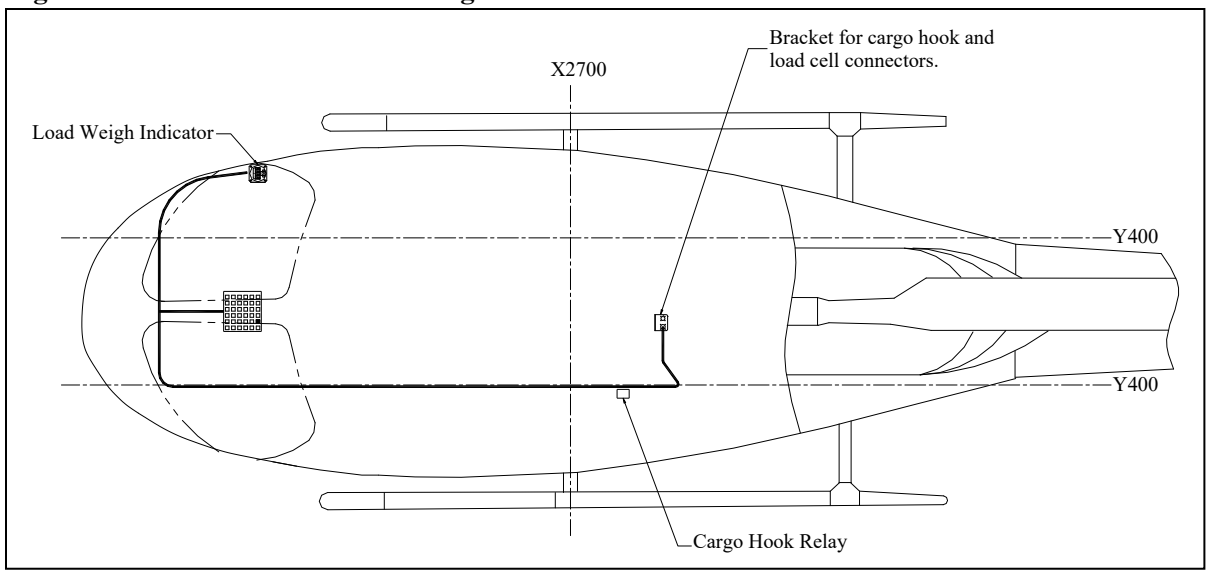

Table 25.3 Notes continued:

2. Checking Wire Harnesses continued

The electrical schematic for the electrical release system and the load weigh system is shown below. Airbus Helicopters modification #'s 07-4280 and 07-3450 are reflected below. Earlier Airbus Helicopters configurations which affected how and where wires ME1E, ME2E and ME10E of the electrical release harness and load weigh harness interface with the helicopter are shown on the following page. Refer to the applicable Airbus Helicopters Wiring Diagrams Manual for additional information.

Figure 25.15.3 Electrical Schematic

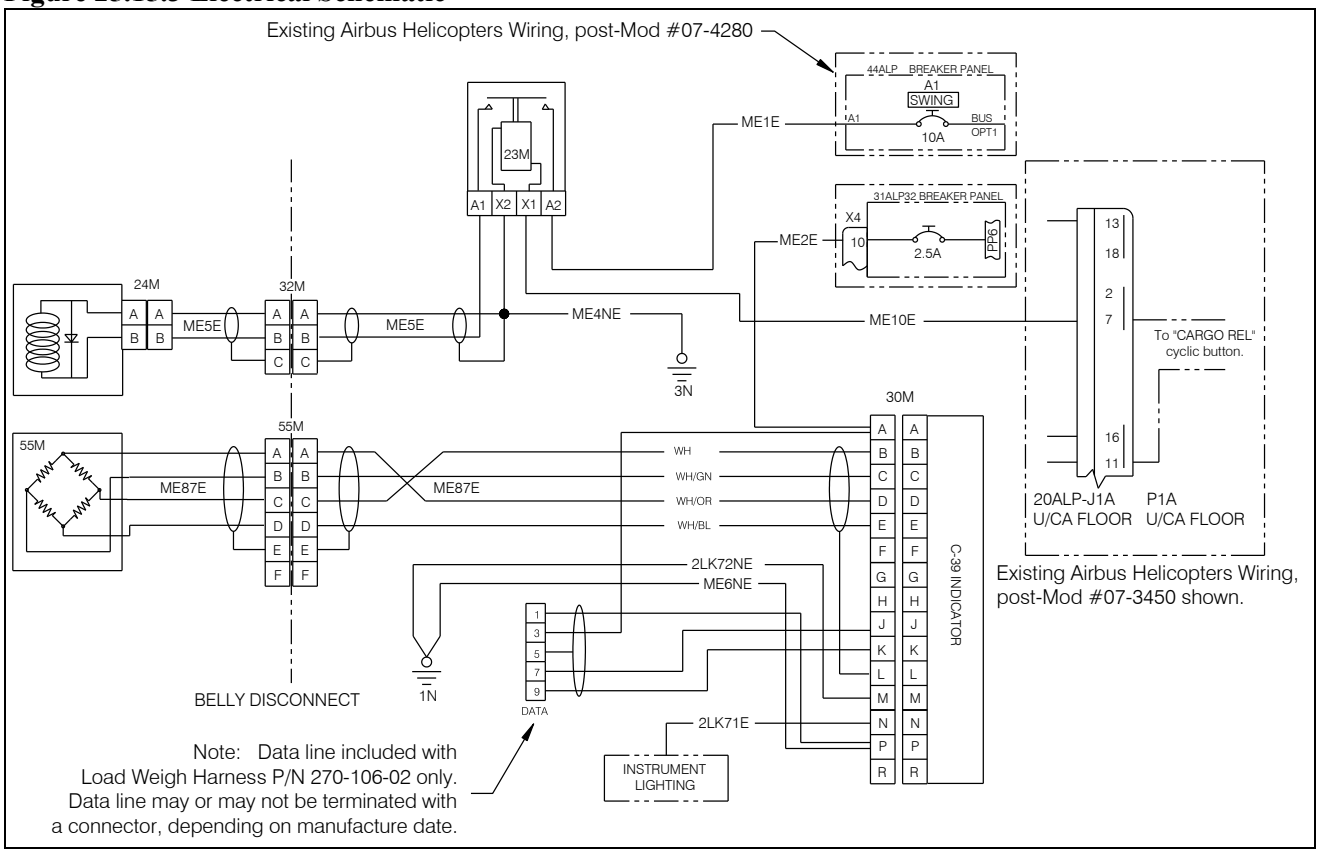

Table 25.3 Notes continued:

2. Checking Wire Harnesses continued

Figure 25.15.3 Electrical Schematic continued

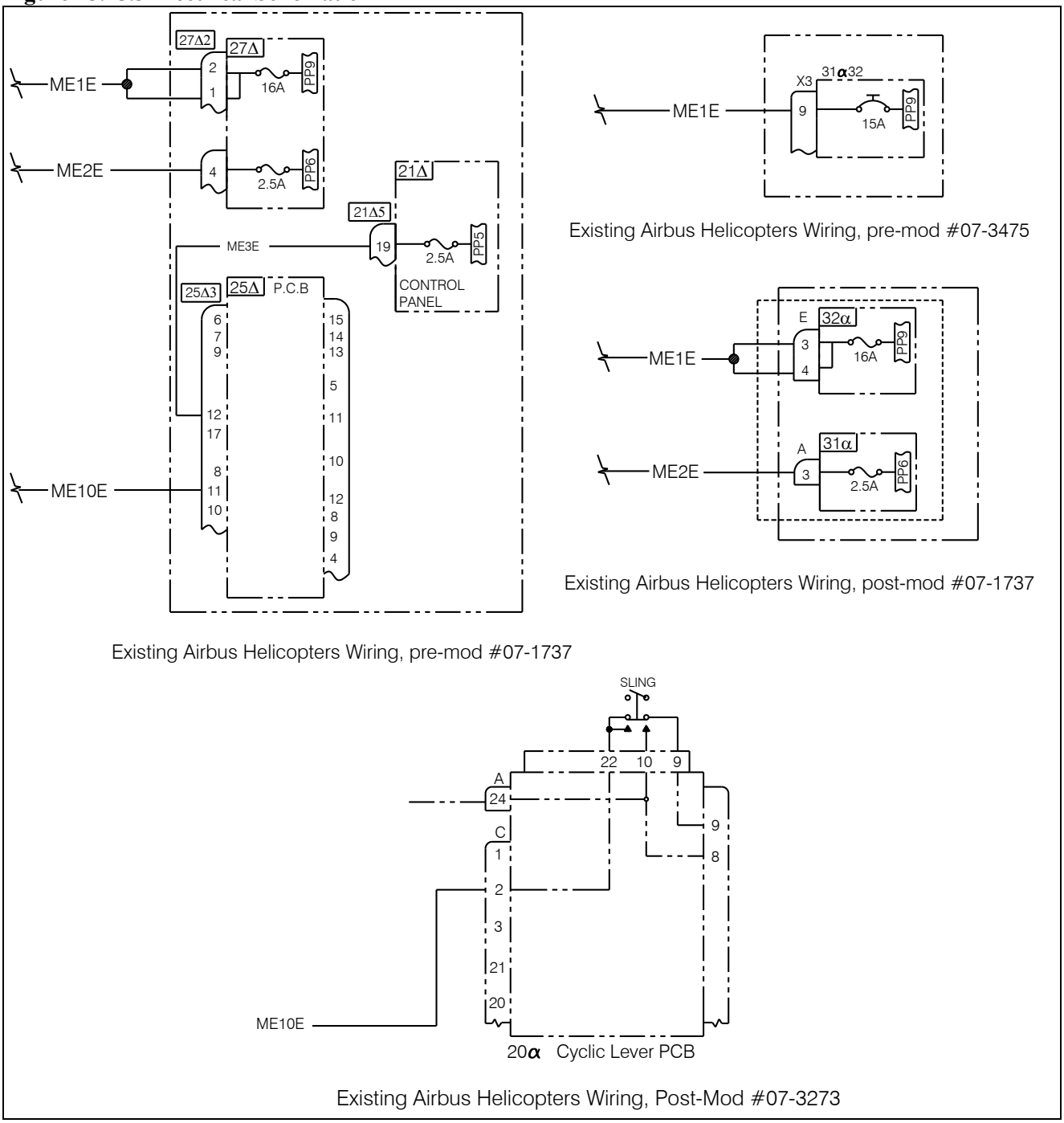

Existing Airbus Helicopters Wiring, pre-mod #07-1737

Existing Airbus Helicopters Wiring, pre-mod #07-3475

Existing Airbus Helicopters Wiring, post-mod #07-1737

Existing Airbus Helicopters Wiring, Post-Mod #07-3273

Table 25.3 Notes continued:

3. Checking Load Weigh Indicator calibration code:

With the Indicator powered up and in the Run Mode, press both buttons at the same time to go to Setup. Scroll through the menu until the word CODE is displayed, then press the Right button. The display should look like this:

Figure 25.15.4 CAL Code

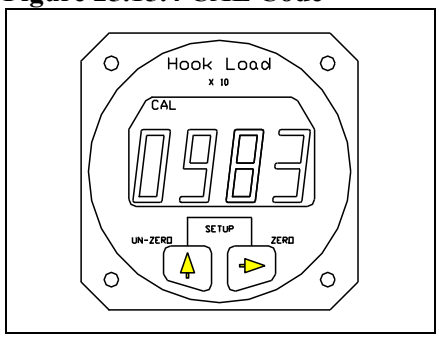

This code should match the code printed on the tag attached to the load cell cable. If this code does not match, contact Onboard Systems for further guidance.

4. Adjusting dampening level:

With the Indicator powered up and in the Run Mode, press both buttons at the same time to go to Setup. Scroll through the menu, using the Left button, until the word DAMP is displayed. To look at or change the Dampening Level press the Right button. The display should look like this:

Figure 25.15.5 Changing Dampening Level

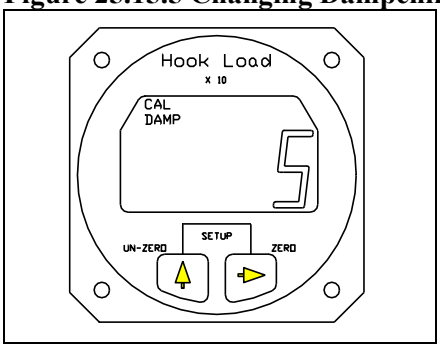

The CAL and the DAMP legend is turned on and the previously set dampening level is displayed. To return to Run without changing the current dampening level press both the Right and Left buttons at the same time. To change the dampening number, use the Left button to scroll the blinking digit to the desired number. Ten dampening levels are available, from 0 through 9. At level 0 the display responds to the slightest change in weight. However, if the load bounced even slightly, the display digits would respond instantly, making the display look unstable. With a dampening level of 9, the display would be stable under the most turbulent conditions, however, it would take several seconds for the display to respond to a change in weight. The ideal dampening level will depend on the flying conditions. A mid range setting of 5 or 6 is usually adequate. After the selection has been made press both the Right and Left buttons at the same time to return to Run.

25.16 Component Removal

Cargo Hook Removal

1. Cut and remove all lockwire.
2. Remove manual release cover by removing two screws.
3. Remove the manual and electrical release cables from the Cargo Hook.
4. Remove the cotter pin from the Attach Bolt (reference Figure 25.17.2).
5. Remove the castellated nut from the Attach Bolt.
6. Remove Attach Bolt and all washers.
7. Remove the Cargo Hook from suspension system.
8. Remove the Hook Bumper and ground strap from the cargo hook.

Suspension System Removal

1. Disconnect the load cell cable at the bulkhead connector on the belly of the aircraft.
2. Disconnect the electrical release cable at the bulkhead connector on the belly of the aircraft.
3. Disconnect the ground strap at the quick disconnect near the bulkhead connector on the belly of the aircraft.
4. Disconnect the manual release cable at the quick release fitting.
5. Remove the Safety Pins and Quick Release Pins at the 4 joints where the suspension cable ends mate with the Shackle Assemblies as illustrated below.

Figure 25.16.1 Suspension Attachment Hardware

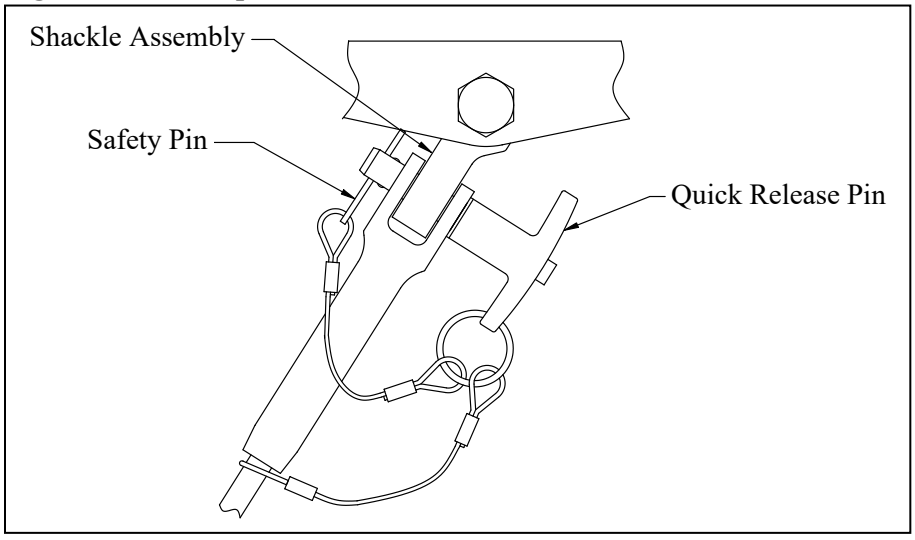

25.16 Component Removal continued

Fixed Manual Release Cable Removal

1. Disconnect the cable at the joint with the fixed manual release cable on the belly of the helicopter by disengaging the retaining pin and unthreading the adapter fitting to expose and disengage the cable end fittings.

Figure 25.16.2 Manual Release Cable Connection

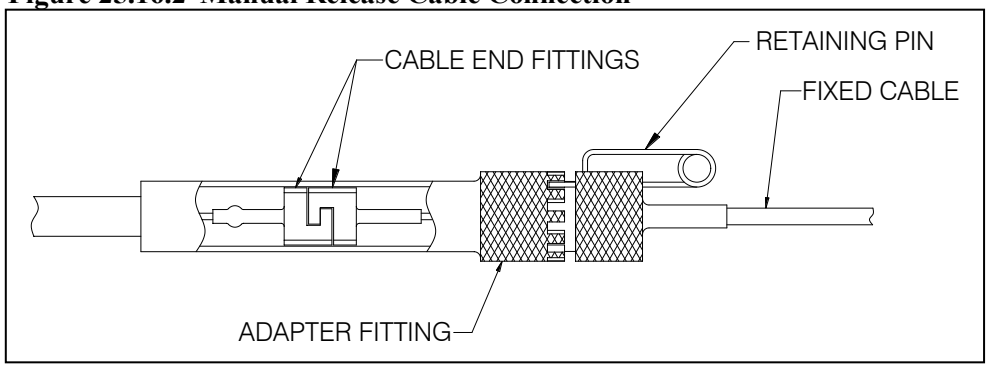

2. At the other end of the cable (at the cargo hook) remove the two screws that secure the manual release cover to the hook (see below) and unhook the cable ball end from the fork fitting.

Figure 25.16.3 Manual Release Cover Removal

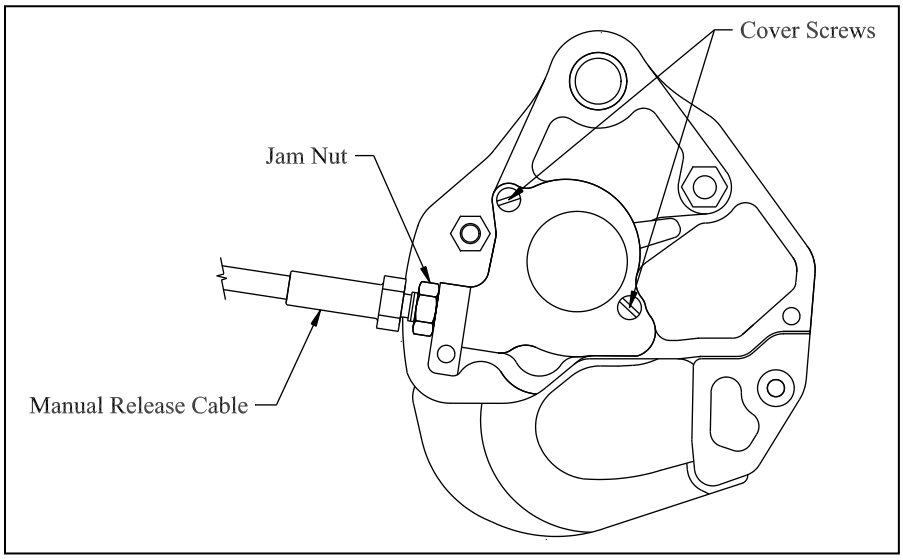

3. Loosen the jam nut and unthread the release cable from the hook.

25.16 Component Removal continued

Fixed Manual Release Cable Assembly Removal

The fixed manual release cable is routed from the release lever mounted to the collective stick to the bracket on the belly of the helicopter where it is mated with the removable section of the cable.

Figure 25.16.4 Fixed Manual Release Cable Routing

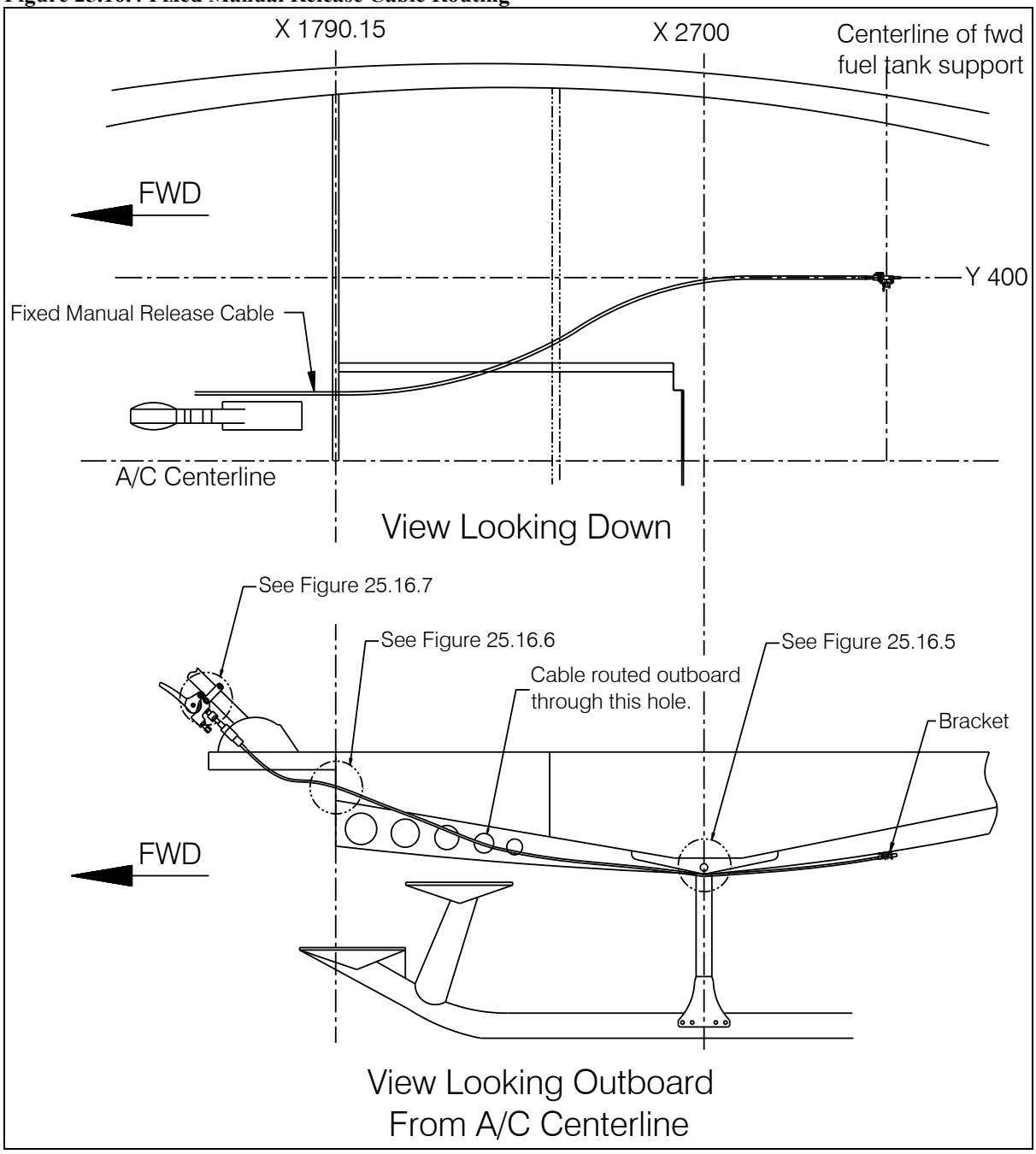

25.16 Component Removal continued

Fixed Manual Release Cable Assembly Removal continued

1. Unclip the end of the cable assembly from the bracket on the belly of the helicopter.
2. Remove the adel clamp from the Attachment Bracket at the RH forward landing gear fitting and remove it from the cable.

Figure 25.16.5 Cable Attachment at Landing Gear Fitting

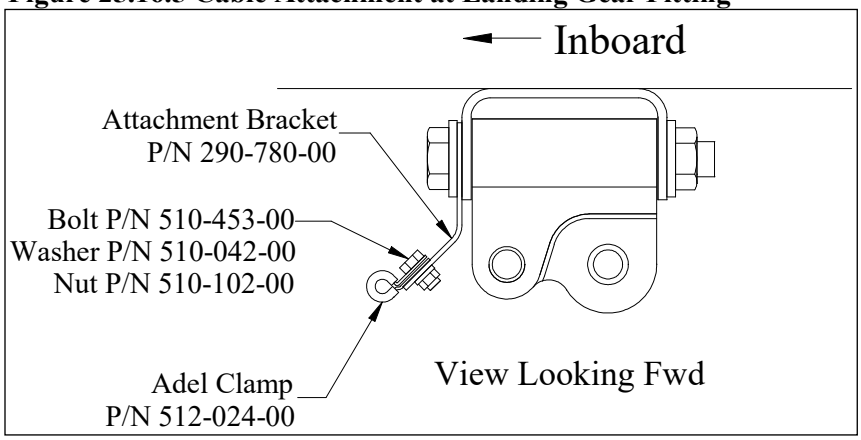

3. Moving farther forward, remove the adel clamp at the bracket at frame at 1790.15 and remove it from the cable.

Figure 25.16.6 Cable Attachment at Frame at X1790.15

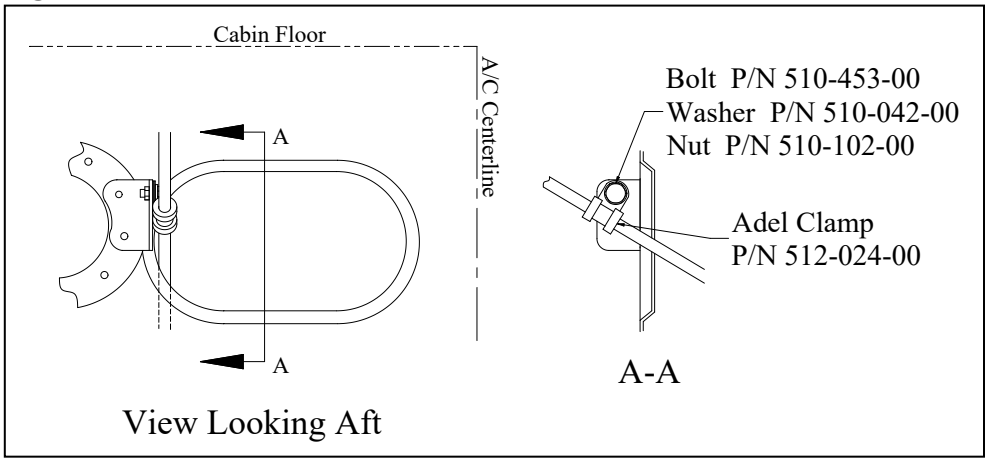

25.16 Component Removal continued

Fixed Manual Release Cable Assembly Removal continued

4. Above the floor and on the collective stick remove the release lever by removing two screws (see below).

Figure 25.16.7 Manual Release Lever

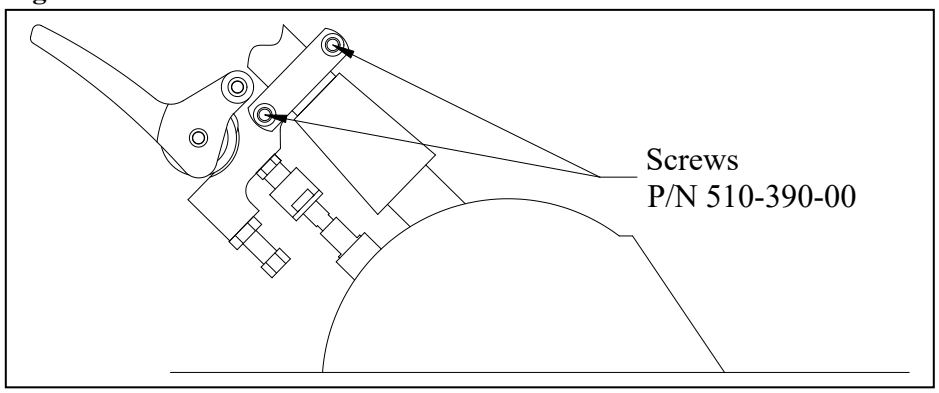

5. Feed the cable forward and then up through the slot in the floor.

NOTICE

Remove the grommet from the slot to allow the end fitting on the cable to be fed through.

Load Weigh Indicator Removal

The load weigh indicator is located on the RH forward door pillar.

1. Disconnect electrical connector from the back of indicator.
2. Remove the four screws (P/N 510-457-00) that secure the indicator to the mounting bracket and remove the indicator.

Figure 25.16.8 Load Weigh Indicator

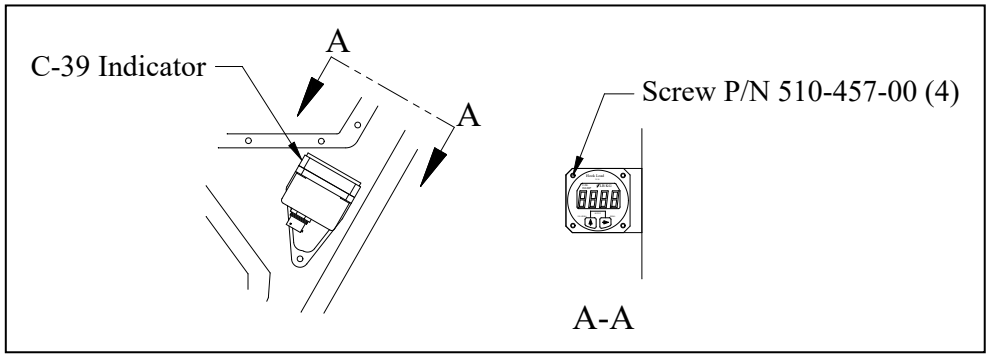

25.16 Component Removal continued

Load Cell Removal

1. Disconnect the electrical connector on the belly of the helicopter.
2. Remove the Cargo Hook per the above instructions.
3. Remove the Load Cell Assembly from the gimbal on the suspension frame (not shown) by removing the hardware as illustrated below.

Figure 25.16.9 Load Cell Hardware

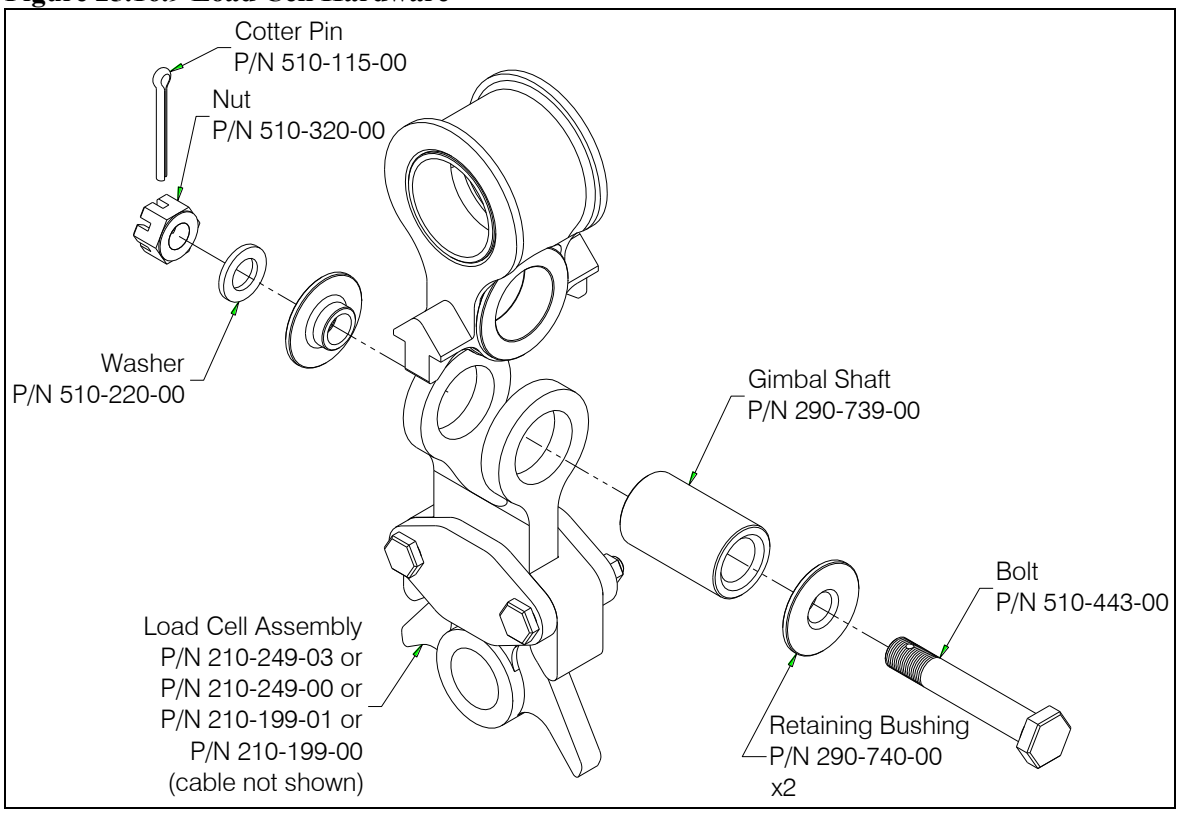

Self-Lubricated Bushing Removal

All self-lubricated bushings use an interference fit to hold them in place. Use an arbor press or similar to press the bushings out of bore they are mounted in.

CAUTION

Do not use heat on any of the parts when removing the self-lubricated bushings. These parts are all heat-treated and using heat may affect their mechanical properties.

25.16 Component Removal continued

Fuel Drain Guard Removal

1. Drain fuel tank.
2. Remove cotter pins from Guard.
3. Remove lever.
4. Remove safety wire between fuel tank valve and retainer tab.
5. Remove ground strap from Retainer.
6. Unthread fuel drain valve from tank and remove it and washer.
7. Remove Guard and Retainer.
8. Remove Bracket.

Figure 25.16.10 Fuel Drain Guard Removal

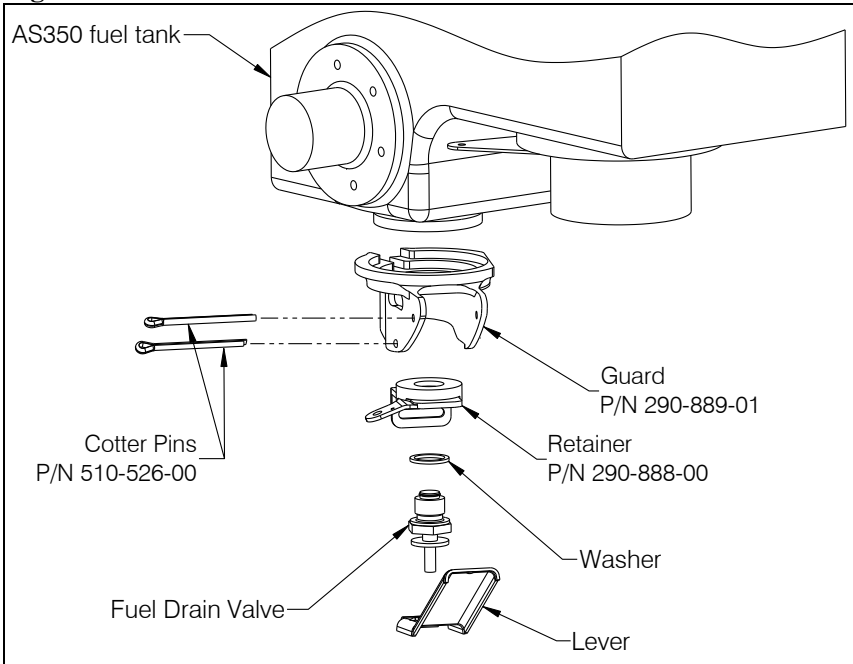

Note: Fuel Drain Valve, Washer, and Lever are Airbus Helicopter parts. Refer to your helicopter's maintenance manual for information regarding these items.

25.17 Component Re-installation

Suspension Re-installation

1. Inspect the Suspension for evidence of damage, corrosion, cable fraying, freedom of rotation at all pivot points, and security of fasteners. If damage is evident, do not use the items until they are repaired.
2. Verify that the part number of the cargo hook removed matches one of the numbers on the list in the Applicability section of this manual. If it does not, do not attempt to use the cargo hook, contact the factory for clarification
3. Install the Suspension by securing the shorter suspension cables' Clevis Cable Ends (see figure below) to the forward Shackle Assemblies and the longer suspension cables' Clevis Cable Ends to the aft Shackle Assemblies with the quick release pins. Secure quick release pins with attached safety pins.

   IMPORTANT: Cable Clevis Ends must be pinned to the **inboard** holes of the Shackle Assemblies (as illustrated below).
4. Connect the load cell cable connector at the bulkhead connector at the belly of the aircraft.
5. Connect the electrical release cable at the bulkhead connector at the belly of the aircraft.
6. Connect the ground strap attached to the cargo hook to the ground strap attached to the aircraft.
7. Re-install the manual release cable per instructions in this section.

Figure 25.17.1 Suspension Cable Attachment

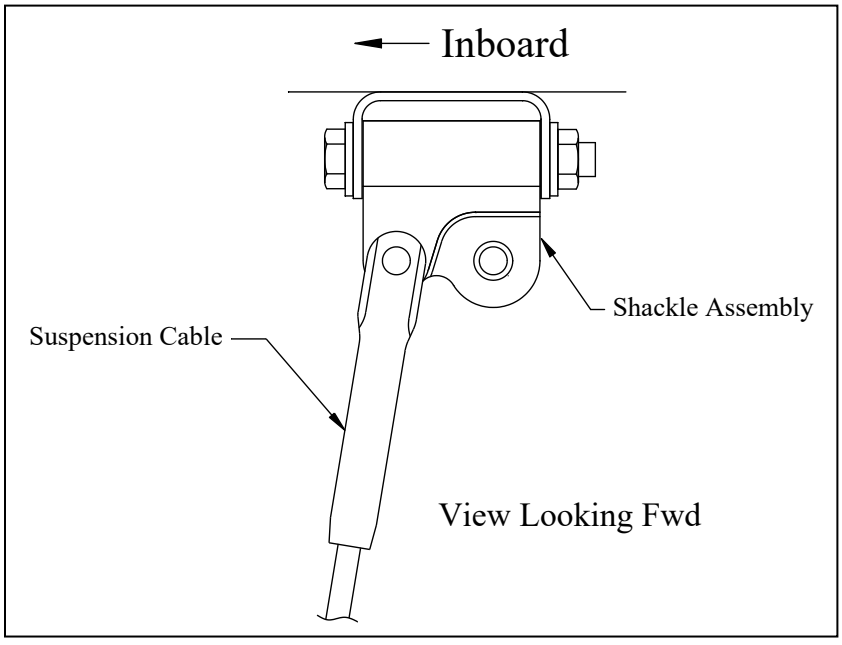

25.17 Component Re-installation continued

Cargo Hook Re-installation

1. Inspect the Cargo Hook for evidence of damage, corrosion and security of lock wire and fasteners. If damage is evident, do not use the items until they are repaired.
2. Inspect the suspension system to ensure that all components are in serviceable condition before re-installing the cargo hook to the suspension system.
3. Attach the Cargo Hook, P/N 528-023-01 to the suspension system by installing the Bumper P/N 290-774-00 over the Cargo Hook.
4. Install the load bolt P/N 290-775-00 and washer P/N 510-183-00 as illustrated in Figure 25.17.2.
5. Install washer P/N 510-183-00 and washer P/N 510-174-00 over bolt end.
6. Tighten nut P/N 510-170-00 on bolt to finger tight, then rotate to next previous castellation (if necessary) to insert and secure cotter pin P/N 510-178-00.

Figure 25.17.2 Cargo Hook Attachment Hardware

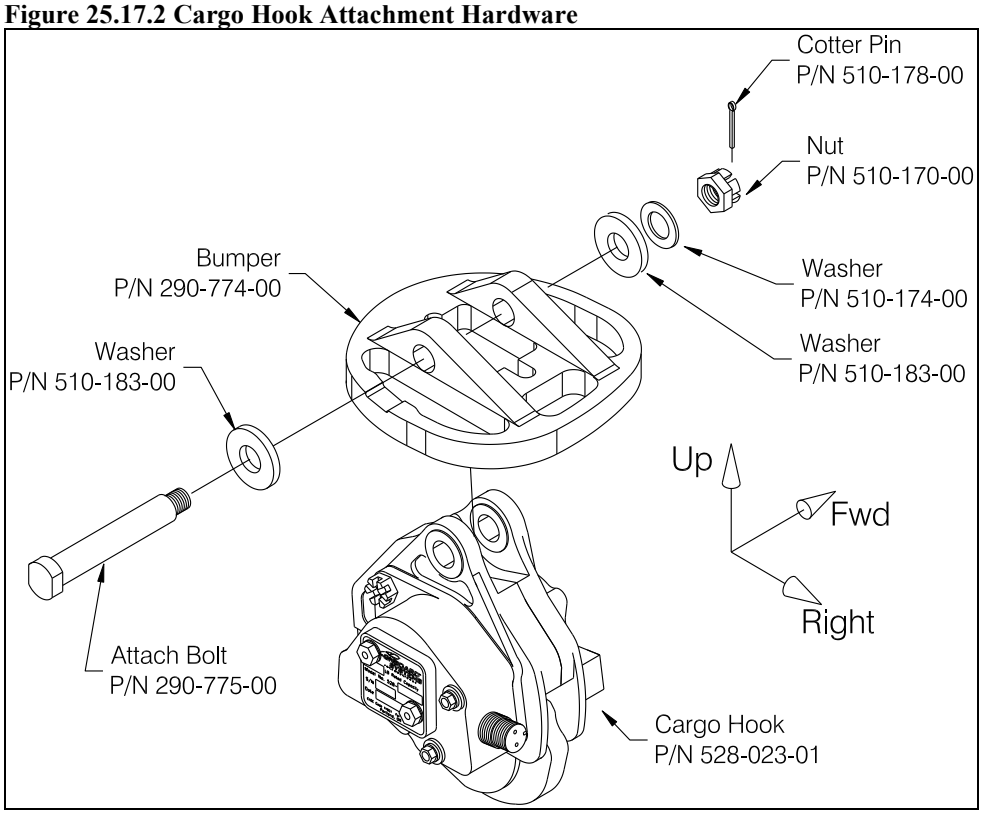

NOTICE

The Cargo Hook Load Beam must point to the left side of the helicopter when looking from the rear (as shown above).

25.17 Component Re-installation continued

Manual Release Cable Re-installation

Connect the manual release cable (P/N 268-024-02) to the cargo hook first, per the following instructions:

- Remove the manual release cover from the cargo hook. Thread the fitting at the end of the manual release cable into the manual release boss on the hook side plate until the threads protrude approximately .125" inch beyond the boss and secure with jam nut (as shown in Figure 25.17.3).

  Leave the cover off of the cargo hook until the other end of the release cable is connected, in order to verify proper setting.

Figure 25.17.3 Manual Release Cable Fitting Adjustment

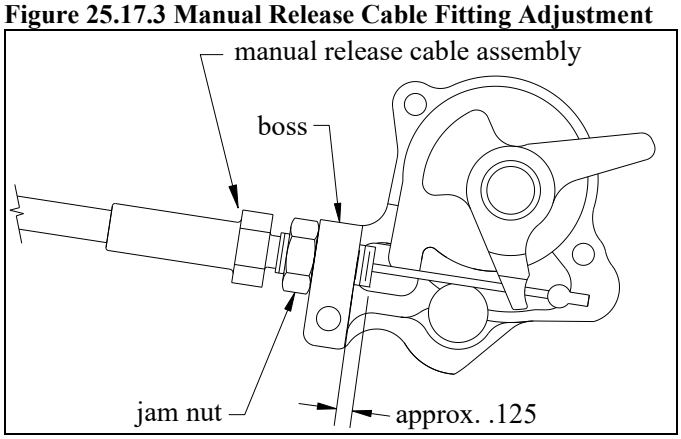

- Route the manual release cable through the right side of the suspension frame as shown below. Clip the cable into the clamps at points 1 and 2 on the belly panel.

Figure 25.17.4 Manual Release Cable Routing

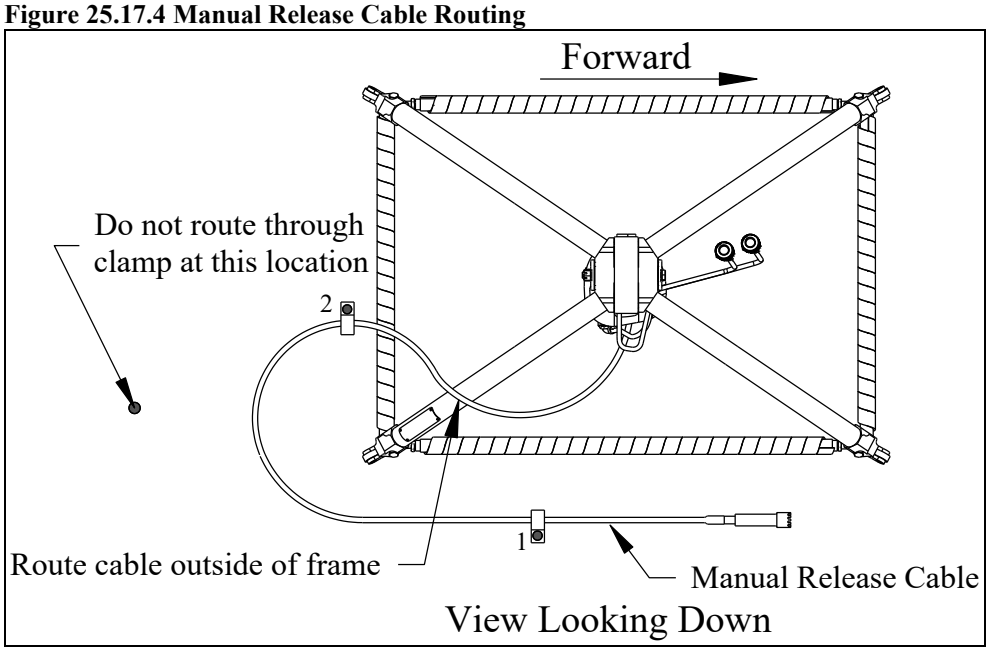

25.17 Component Re-installation continued

Manual Release Cable Re-installation continued

- Connect the other end of the release cable to the fixed section of the manual release cable by mating the cable end fittings together as shown below (slide back the Adapter Fitting to access fitting on removable cable).
- Slide the Adapter Fitting forward and thread it onto the fixed cable fitting, and engage a castellation on the Adapter Fitting with the retaining pin and lock it in place.
- Snap the Adapter Fitting into the existing clip mounted to the belly of the helicopter.

Figure 25.17.5 Manual Release Cable Connection

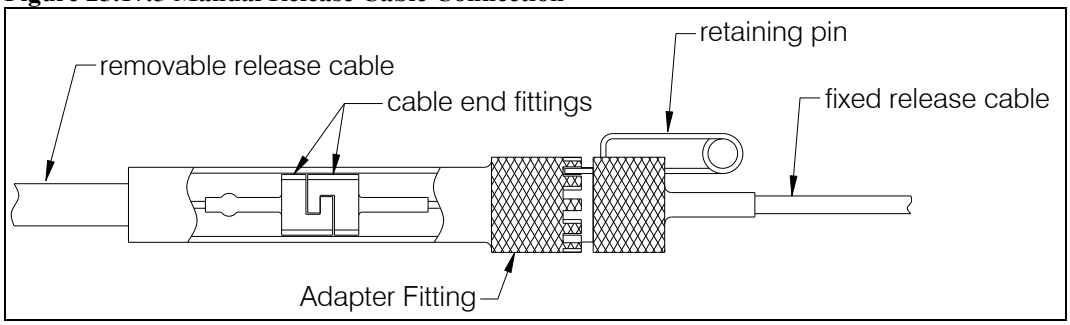

25.17 Component Re-installation continued

Manual Release Cable Re-installation continued

Verify proper setting at the cargo hook:

- Place the cable ball end fitting into the manual release lever fork as illustrated in Figure 25.17.6. With the load beam in the closed and locked position move the manual release lever in the clockwise direction until it is against the cam stop (this position can be felt, as the lever moves relatively easy for several degrees before greater resistance is encountered). Measure the cable ball end free play with the manual release lever in the cockpit in the non-release position. The gap should measure a minimum of .125" (see below).

⚠ CAUTION

Manual release cable rigging must be checked with the cargo hook in the closed and locked position.

Figure 25.17.6 Manual Release Cable Rigging

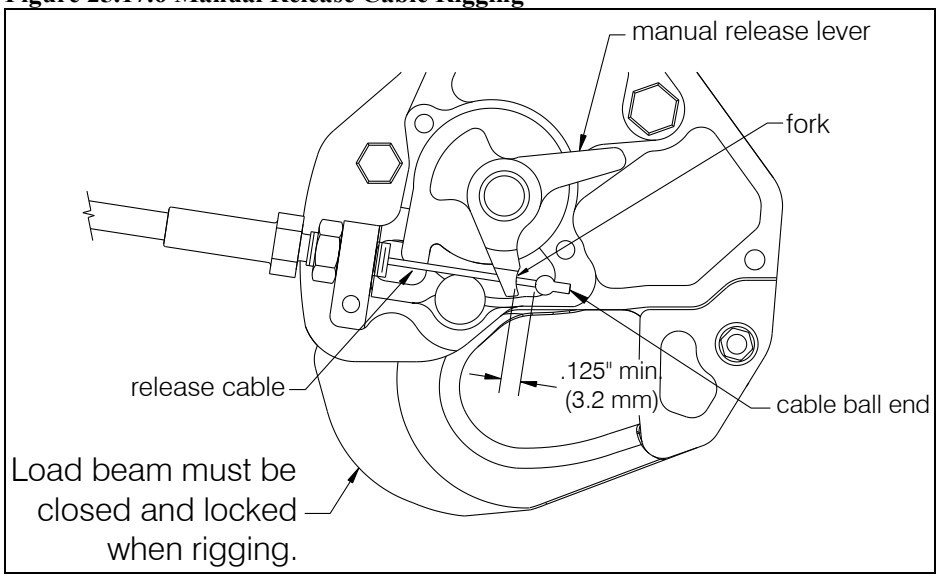

- If the gap does not measure at least .125", make adjustments at the cargo hook or at the release lever in the cockpit. Adjustment at the cargo hook is done by disconnecting the cable at the interface with the fixed manual release cable on the belly, loosening the jam nut, and rotating the cable in the required direction.
- Upon completion of rigging, pull the release lever on the collective and verify that the cargo hook load beam opens.

25.17 Component Re-installation continued

Fixed Manual Release Cable Assembly Re-installation

1. Feed the end of the cable through the slot in the floor and re-install grommet.
2. Install the release lever onto the collective with the two screws (P/N 510-390-00).
3. Install the loop clamp around the release cable at the bracket at frame at 1790.15 with hardware as shown in Figure 25.16.6.
4. Install the loop clamp around the release cable at the Attachment Bracket with hardware as shown in Figure 25.16.5.
5. Clip the end of the cable assembly onto the bracket on the belly.

Load Weigh Indicator Re-installation

1. Place the Load Weigh Indicator into the mounting bracket on the RH door pillar and secure with four screws (P/N 510-457-00).
2. Connect the electrical connector on the wiring harness to its connector.

Load Cell Re-installation

1. Attach the load cell assembly to the gimbal fitting on the suspension frame with hardware as illustrated in Figure 25.16.9.
2. Tighten nut to 60-70 in-lbs and rotate to next castellation if necessary to insert cotter pin.

CAUTION

The Load Cell Assembly must pivot freely about its upper attach point independently of the bolt (P/N 510-443-00) and nut, back the nut off to previous castellation if necessary to achieve this.

3. Connect the load cell electrical cable connector on the load cell cable to the connector on the belly of the helicopter.
4. Attach load cell cable to cargo hook bumper with ty-wraps. After installation is complete, ensure cable does not get pulled or pinched at any point in the full range of motion of cargo hook and swing.

NOTICE

A Link Assembly (P/N 232-436-00 or P/N 232-436-01) can be installed in place of the Load Cell Assembly. It is installed using the same hardware as the Load Cell Assembly. The Link Assembly does not provide load weighing.

Self-Lubricated Bushing Re-installation

1. Install bushings with wet zinc chromate primer (TTP1757-1CY or equivalent) on the inside diameter of the mating hole. Use an arbor press and an appropriately sized press tool to push the bushing into the hole until it is fully seated.

25.17 Component Re-installation continued

Fuel Drain Guard Re-installation

1. Remove residual sealant from the tank and Retainer, P/N 290-888-00, taking care not to mar the sealing surfaces. Prepare the areas for sealing per Airbus Helicopters Standard Practices Manual.
2. Prepare PR1422-B or equivalent sealant per Airbus Helicopters Standard Practices Manual. Apply sealant to Retainer as shown in Figure 25.17.7.

Figure 25.17.7 Sealant Application Location

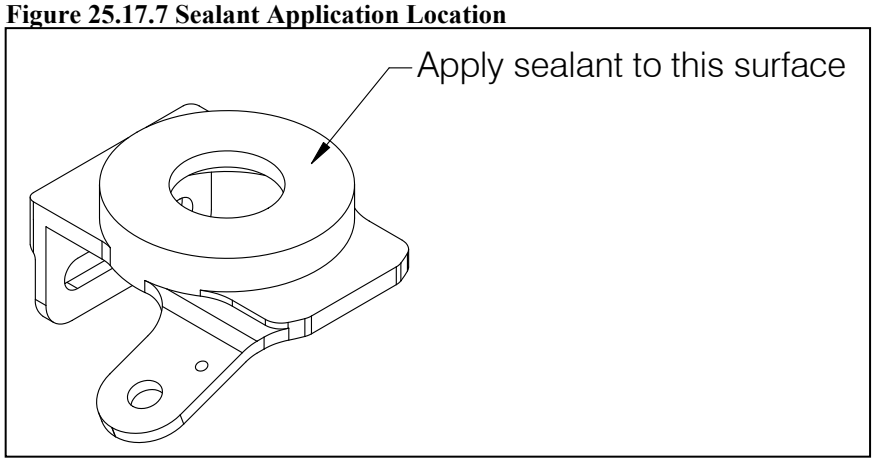

3. Place the Retainer (P/N 290-888-00) inside the Guard (P/N 290-889-01), by inserting the tab through the slot in the Guard. See Figure 25.17.8.

Figure 25.17.8 Guard/Retainer Assembly

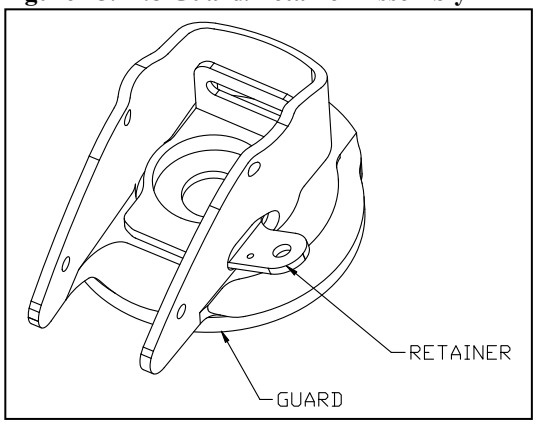

4. Place these two items onto the boss on the bottom of fuel tank, aligning the notch in the Guard with the key on the bottom of the fuel tank.

25.17 Component Re-installation continued

Fuel Drain Guard Re-installation continued

5. Secure the Guard and Retainer by re-installing the Fuel Drain Valve with new Fuel Valve Seal, 610-024-00. Use a flat-blade screwdriver to prevent the Retainer from twisting when tightening the Fuel Drain Valve. Torque per Airbus Helicopters specifications.
6. Secure the Fuel Drain Valve with safety wire using the small hole in the retainer tab.
7. Re-install the electrical connections to the Retainer tab per Airbus Helicopters Electrical Bonding Procedure. Refer to Airbus Helicopters Standard Practices Manual, 20.02.07.
8. Install the Lever by placing it in Retainer slot and rotating upwards. Secure with cotter pin (P/N 510-526-00). See Figure 25.17.9.

Figure 25.17.9 Lever Installation

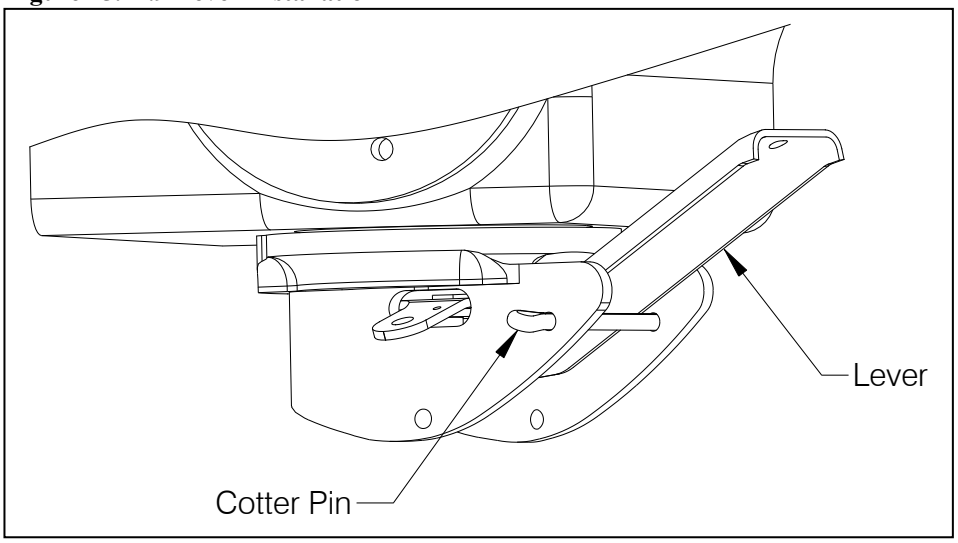

9. Install a second cotter pin through the other holes in the Guard (this cotter pin is for valve protection only and is not used for rigging purposes).

25.17 Component Re-installation continued

Fuel Drain Guard Re-installation continued

10. Prepare to install Bracket (P/N 290-893-00) by threading the control cable through the Bracket hole. Install Bracket using the two screws removed previously.
11. Pass the cable through the Spring (Airbus Helicopters P/N 350A55-1044-21) and Lever (Airbus Helicopters P/N 350A55-1043-21). Slide the Sleeve (Airbus Helicopters P/N N1-5ALU) over the cable and secure with Cable Grip (Airbus Helicopters P/N 58-2-009).

⚠ CAUTION

To avoid inadvertent fuel loss, Airbus Helicopters P/N 58-2-009 Cable Grip must be used with this installation.

12. Adjust the cable travel by doing the following: allow the lever to rest against the cotter pin stop. Slide the Cable Grip up to the bottom of the lever and secure (see Figure 25.17.10).

Figure 25.17.10 Cable Setting

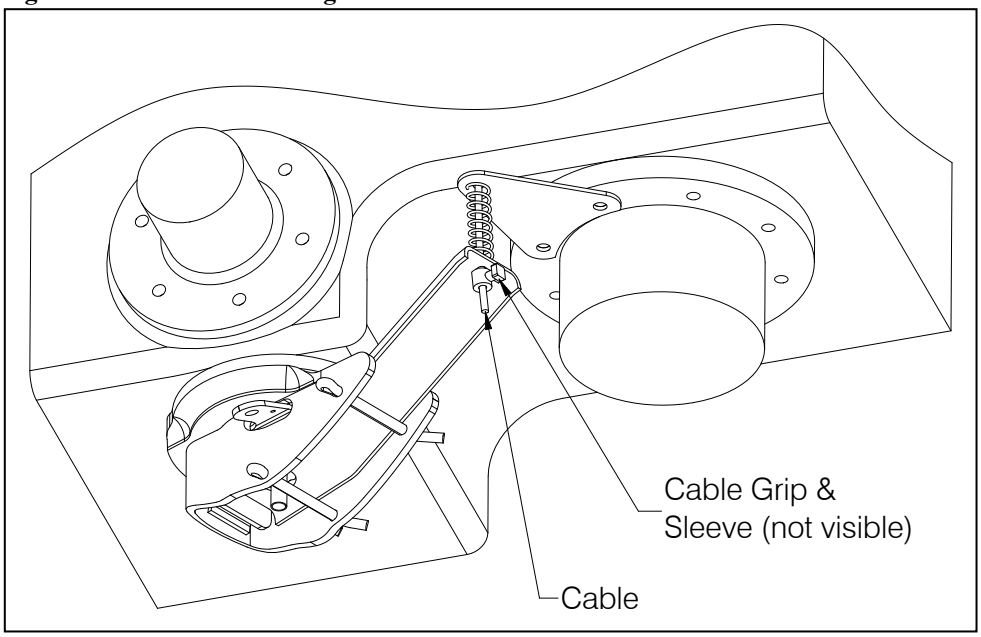

13. Allow the sealant to cure per Airbus Helicopters Standard Practices Manual before adding fuel. Verify proper cure of unused sealant.
14. Refill fuel tank and check for leaks.

25.18 General Procedural Instructions-Testing

After re-installation of the cargo hook, manual release cable or electrical release harness perform the following:

1. Activate the electrical system and press the Cargo Hook release button to ensure the cargo hook electrical release is operating correctly. The mechanism should operate smoothly and the Cargo Hook must release. Reset the hook by hand after the release. If the hook does not release or re-latch, do not use the unit until the difficulty is resolved.



The release solenoid is intended to be energized only intermittently. Depressing the electrical release button continuously in excess of 20 seconds will cause the release solenoid to overheat, possibly causing permanent damage.

2. Activate the release handle located on the collective to test the cargo hook manual release mechanism. The mechanism should operate smoothly and the Cargo Hook must release. Reset the hook by hand after release. If the hook does not release or re-latch do not use the unit until the difficulty is resolved.

3. Swing the installed Cargo Hook and the suspension to ensure that the manual release cable assembly and the electrical release cable have enough slack to allow full swing of each component without straining or damaging the cables. The cables must not be the stops that prevent the Cargo Hook or the suspension from swinging freely in all directions.

4. Visually check for presence and security of fasteners, and condition of cables. Swing the Cargo Hook and the suspension in fore and aft and side to side directions to check for freedom of rotation at all joints.

5. Visually inspect for cracks in suspension frame. The frame tubes contain a corrosion preventative compound, which may leak out through a crack and also provide an indication.