Component Maintenance Manual, Cargo Hook

Onboard Systems International, LLC
13915 NW 3rd Court
Vancouver, WA 98685 United States of America
CAGE Code: 1Y921

Toll Free Phone: (800) 275-0883
Phone: (360) 546-3072

Applicable Equipment Part Numbers

528-028-00
528-028-01
528-028-02
528-028-03
528-028-04
528-028-05
528-028-06
528-028-11
528-028-55
528-028-57
528-028-58
528-028-65
528-028-69

Please check our web site www.onboardsystems.com for the latest revision of this manual.

This document is proprietary to Onboard Systems Int'l. Disclosure or reproduction is not allowed. © 2026 Onboard Systems Int'l., all rights reserved.

RECORD OF REVISIONS

Revision	Date	Page(s)	Reason for Revision
27	01/14/20	5, 10	Replaced NDT inspection of Toggle (6.2) and Load Beam Assembly (1.1, 1.2) with magnified visual inspection; moved inspection step to Table 9.1. Changed item 1 of section 4.5 to require a functional check rather than full ATP.
28	12/15/20	5, 6, 12, 15	Added new inspections and schedule for torsional loading applications. Added repair action for load beam assembly to Table 9.1.
29	03/09/21	1, 4, 10, 21, 27, 29, 31, 32, 34-44	Added Cargo Hook P/Ns 528-028-04 and 528-028-58.
30	10/08/21	8, 36, 39-42	Removed -58 from Figure 13.2. Added figure for -58. Adjusted quantities of -58 parts: added 1x of: 292-095-00, 450-154-00, 512-036-00. Removed 291-401-01. Changed 400-050-00 to 292-094-00. In section 6.2 added note: C-40 can be used to track external load hours.
31	05/11/22	4, 12, 37, 38, 41	Section 4.2 title was: Monthly Preventative Maintenance, is: Cleaning and Preventative Maintenance. Changed interval from monthly to “based on visual condition”. Added “If applicable” to 4.3.2. Updated table 9.1 and added figure 9.2 to show wear allowance for -58 load beam. Incremented 9.X figures. Table 13.1 Added components to 528-028-58: 232-734-01, 291-915-01, 232-185-01, 509-002-00, 509-003-00, 509-004-00
32	07/26/22	4, 8, 37-42	Added 212-071-00 Overhaul Kit for 528-028-58. Added grace period to maintenance and overhaul schedule. Added section references for overhaul and maintenance.
33	02/10/23	13, 17, 18, 21, 38	Added cleaning and inspection instructions for cam surfaces. Added cam assembly to overhaul kits.
34	04/24/24	4,14, 21, 29 33, 35, 38-44	Added Cargo Hook P/Ns 528-028-05 and 528-028-06.
35	03/07/25	2, 4,10,14,15, 27, 31, 32, 36-43	Added Cargo Hook P/N 528-028-65.
36	03/06/26	4, 20	Added MIL-PRF-23827 Type I as eligible grease to use.
37	11/03/26	13, 19, 27, 39	For hook P/N 528-028-65 only: Replaced toggle assembly 232-185-01 with 232-185-02 (newly added), replaced load beam roller 290-438-00 with 290-438-01 (newly added). Removed zinc-chromate specific callout for primer.

Register Your Products for Automatic Notifications
Onboard Systems offers a free notification service via fax or email for product alerts and documentation updates. By registering your Onboard Systems products at our website, we will be able to contact you if a service bulletin is issued, or if the documentation is updated.

You can choose to receive notices on an immediate, weekly, or monthly schedule via fax, e-mail or both methods. There is no charge for this service. Please visit our website at www.onboardsystems.com/notify.php to get started.

1.0 Introduction

1.1 **Scope.** This component maintenance manual contains instructions for inspection, maintenance and overhaul.

1.2 **Capability.** The instructions contained in this document are provided for the benefit of experienced aircraft maintenance personnel and facilities that are capable of carrying out the procedures.

1.3 **Safety Labels**. The following definitions apply to safety labels used in this manual.



Indicates a hazardous situation which, if not avoided, will result in death or serious injury.



Indicates a hazardous situation which, if not avoided, could result in death or serious injury.



Indicates a hazardous situation which, if not avoided, could result in minor or moderate injury.



Draws the reader's attention to important or unusual information not directly related to safety.



Used to address practices not related to personal injury.

2.0 Referenced Documents

180-169-00 Acceptance Test Procedure – Cargo Hook P/Ns 528-028-00, 528-028-02, 528-028-03, 528-028-04, 528-028-05, 528-028-06, 528-028-11, 528-028-55, 528-028-57, 528-028-58, 528-028-65, 528-028-69

180-181-00 Acceptance Test Procedure – Cargo Hook P/N 528-028-01

3.0 Service Bulletins

3.1 There are currently no Service Bulletins against these cargo hooks.

4.0 Maintenance

4.1 Maintain a record of ALL cargo hook activities including aircraft installation and removal, inspections, repair and overhaul as well as inactivity and storage events.

WARNING

Failure to follow all equipment maintenance instructions and component inspection criteria may result in serious injury, death or immediate loss of flight safety.

4.2 Cargo Hook P/N 528-028-05 for the Bell 429 dual cargo hook system is life-limited by lift cycles with a maximum life of 175,000 lift cycles, refer to Airworthiness Limitations Section (ALS) of ICA 123-056-00.

4.3 **Cleaning and Preventative Maintenance**

1. As needed per visual condition remove accumulated soils from exterior with a soft bristle brush and mild solvent/cleaner.

2. As needed per visual condition, in saltwater environments, apply a corrosion preventative compound such as ACF-50 to all exterior surfaces.

4.4 **Annual Inspection***

1. Annually or 100 hours of external load operations, whichever comes first, remove the Cargo Hook from the aircraft. Thoroughly clean the exterior with a soft bristle brush and mild solvent/cleaner and visually inspect exterior for cracks, gouges, dents, nicks, corrosion, and missing or loose fasteners. See Table 9.1 for inspection criteria. A one-month or 10-hour grace period can be applied if needed. No additional extension is allowed beyond this grace period.

2. If applicable, lubricate the Cargo Hook attach bolt. Recommended lubricants are MIL-PRF-81322 (e.g. - Mobilgrease 28), MIL-PRF-23827 Type I (e.g. – Mobilgrease 33) or MIL-PRF-23827 Type II (e.g. - AeroShell 7) grease.

4.5 Overhaul

1. Overhaul the Cargo Hook in accordance with the overhaul schedule and instructions starting at section 6.0.

4.6 Special Inspections for Torsional Loads

If the Cargo Hook is used with torsional loads (such as a fertilizer slinger bucket) that are attached directly to the cargo hook via a spreader bar (without any additional restraints), perform additional inspections as specified in this section.

⚠ WARNING

Loads attached to the cargo hook with a spreader bar (such as a typical fertilizer bucket) cause the cargo hook to react high torsional loads. Repetitive high torsional loads are damaging to the cargo hook and require additional inspection and on-condition repair or replacement actions, as defined in this section.

1. 20 Hour Inspection.

Every 20 hours of external load operation with torsional loads, perform the following inspections.

- Torsional loads may react aggressively on the armor plates (items 8, 9) and cause them to loosen. Ensure that they are secured with bolt (22) and nut (17). Re-torque nut (17) to 35-40 in-lb.
- Torsional loading may cause the load beam pivot shaft to migrate within the load beam. To inspect, remove the slave cylinder and the manual release cover per section 8.1 and 8.2 and inspect for migration of the load beam pivot shaft within the load beam. The end of the load beam shaft should be flush with the adjacent side plate surface to .050 in. (1.27 mm) maximum recess. If this measurement is exceeded, disassemble, inspect, and repair the Cargo Hook per Section 5.0.



2. 100 Hour Inspection

- Remove armor plates (8, 9) per section 8.6, clean the side plates underneath the armor plates and inspect both side plates for cracks using liquid penetrant inspection. If cracks are present, the side plates must be replaced.
- When re-installing armor plates, replace bolt (22) and nut (17) with new items to ensure prevailing torque. Torque nut to 35-40 in-lb.

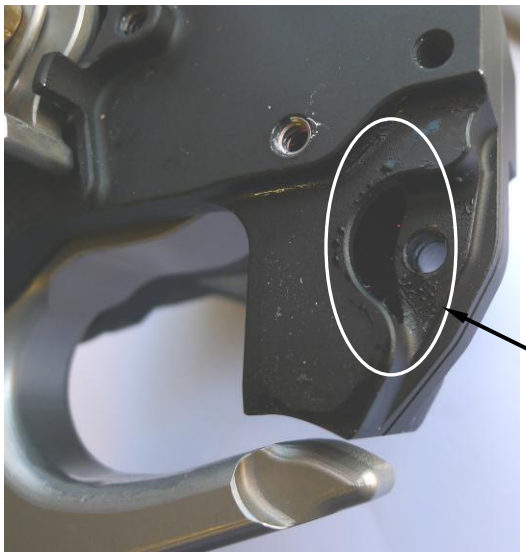

4.7 **Storage and Inactivity**

1. The cargo hook may be stored in its original factory sealed bag and box for up to 2 years from its date of manufacture or last factory overhaul. If stored in its original factory sealed bag and box for less than 2 years, it may be used without any additional activity. If the period of storage in its original packaging is greater than 2 years, the cargo hook must be subjected to a functional check before being used. Perform the functional check per instructions in sections 11.8 through 11.10 of the acceptance test procedures (ATP) herein before being used.

2. If the cargo hook has been installed on an aircraft and subsequently removed from service, store it in a reasonably protected indoor, dry, heated storage area for up to 6 months. If stored in this condition for less than 6 months, it may be used without any additional activity. If it is to be stored longer than 6 months perform the following activities. Prepare the cargo hook for storage by thoroughly cleaning and drying the exterior, liberally applying ACF-50 corrosion preventative compound inside and out, sealing it in a plastic bag with a desiccant, and labeling it with the date of storage. If stored in this condition for less than 2 years, it may be placed in service without any additional activity. If the period of storage exceeds 2 years, the cargo hook must be subjected to the ATP described herein before being placed in service.

3. If the cargo hook has been installed on the aircraft and subsequently removed from service but not stored in accordance with the instructions above, the cargo hook must be subject to the ATP described herein before being placed in service.

4.8 **Repair**

1. Repair the Cargo Hook in accordance with the repair instructions contained here-in.

*** Cargo Hook P/N 528-028-69:** Calendar time alone can be used to determine maintenance, inspection and overhaul intervals.

5.0 Repair Instructions

5.1 It is recommended that only minor repairs be attempted by anyone other than the factory. The following procedures and information are provided for the benefit of experienced aircraft maintenance facilities capable of carrying out the procedures. They must not be attempted by those lacking the necessary expertise and suitable equipment to acceptance test the cargo hook after maintenance. See Section 14 for instructions for returning equipment to the factory.

5.2 Reference numbers throughout this manual shown in parentheses ( ) refer to item numbers in Section 13 figures and table.

5.3 Follow these steps to repair the Cargo Hook, referring to the applicable sections in this manual:

1. Disassemble as required.

2. Inspect disassembled parts.

3. Obtain required replacement parts.

4. Re-assemble.

5. Acceptance test.

6. Inspect for return to service.

6.0 Overhaul Schedule*

6.1 The Cargo Hook shall be overhauled every 1000 hours of external load operations or 5 years, whichever comes first. A six-month or 100-hour grace period can be applied if needed. No extension to maintenance is allowed beyond this tolerance grace period.

6.2 Hours of external load operations should be interpreted as (1) anything is attached to the primary cargo hook (whether a useful load is being transported) and (2) the aircraft is flying. If these conditions are not met, time does not need to be tracked. If a C-40 Load Weigh Indicator is used in conjunction with the cargo hook, it can be used to track external load hours.

6.3 The 5-year period is from the initial installation date when the cargo hook is new or newly overhauled, regardless of storage or inactivity periods. If the initial installation date is unknown, then 5-year period is from date of manufacture as indicated on the cargo hook data plate or 5 years from date of last overhaul indicated on the overhaul sticker.

***Cargo Hook P/N 528-028-69:** Calendar time alone can be used to determine maintenance, inspection and overhaul intervals.

7.0 Overhaul Instructions

7.1 It is recommended that only minor repairs be attempted by anyone other than the factory. The following procedures and information are provided for the benefit of experienced aircraft maintenance facilities capable of carrying out the procedures. They must not be attempted by those lacking the necessary expertise and suitable equipment to acceptance test the cargo hook after maintenance. See Section 14 for instructions for returning equipment to the factory.

7.2 Overhaul Kit P/N 212-020-00* is recommended to complete the Cargo Hook overhaul. The overhaul kit contains all recommended items to be replaced at time of overhaul. Table 13.1 lists detail parts contained in the overhaul kit.

* For Cargo Hook P/N 528-028-58 use kit P/N 212-071-00.

7.3 Follow these steps to overhaul the Cargo Hook, referring to the applicable sections in this manual:

1. Obtain appropriate overhaul kit.

2. Completely disassemble.

3. Discard all items that are to be replaced by an item in the overhaul kit as listed in table 13.1.

4. Inspect disassembled parts.

5. Obtain any required replacement parts.

6. Re-assemble.

7. Acceptance test.

8. Inspect for return to service.

8.0 Disassembly Instructions

8.1 Remove the slave cylinder assembly from the cargo hook.

NOTICE

For STC approved cargo hooks, maintenance instructions for the slave cylinder assembly are contained within the Instructions for Continued Airworthiness (ICA) manual included with the cargo hook kit.

8.2 Remove manual release cover (10) by removing two screws (23).

8.3 Remove cotter pin (18), nuts (17 and 20) and washers (15 and 16).

8.4 Remove bolts (12 and 21) and Solenoid Assembly (7). On Cargo Hook P/N 528-028-11 remove the two screws (32) that secure the switch (7.22) from its Solenoid Assembly to the side plate. Remove the switch actuator (31).

8.5 Remove nut (17), bolt (22) and armor plates (8 and 9). On Cargo Hook P/N 528-028-03, remove the bolt (34), washer (16), and nut (35) securing the Bumper (33) to the armor plates.

8.6 Remove cotter pin (19), nut (14) and washer (24) securing Manual Release Lever Assembly (3).

8.7 Remove Manual Release Lever Assembly and springs (27).

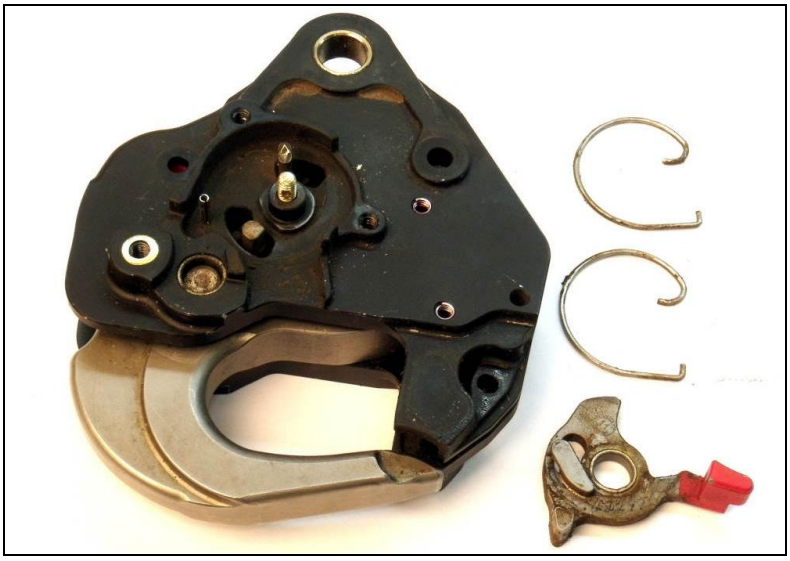

8.8 **On Cargo Hook P/Ns 528-028-04, 528-028-57, 528-028-58 & 528-028-65** remove the load beam grounding spring (29) by removing two screws (30).

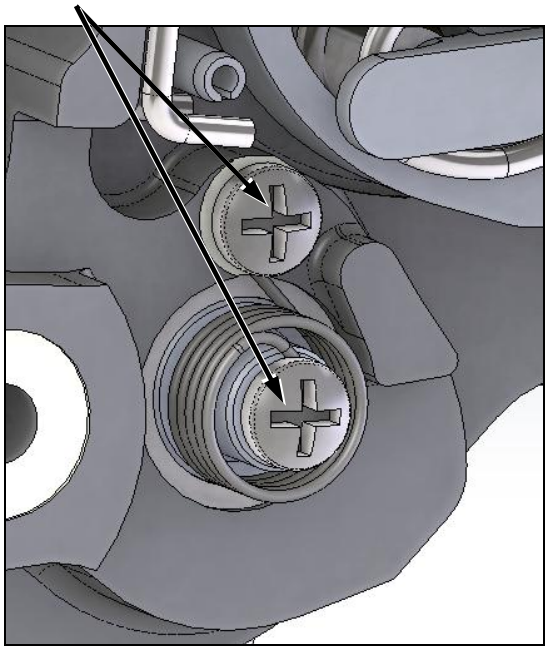

8.9 The cargo hook frame halves can now be separated by removing the Side Plate Assembly (4) from the remaining assembly. The internal mechanism can now be viewed and cycled to check for smooth operation. All of the internal parts may be removed at this time.



8.10 The solenoid (7.6) may be removed from the cover by removing two nuts (7.7) and two washers (7.8) and unsoldering the wires from the connector or the Surefire Module (7.15) terminals (applicable to cargo hook P/N 528-028-02 only) or in the case of P/Ns 528-028-01, 528-028-05, and 528-028-06, remove the heat shrink over the diode and solder joints and unsolder the wires there.

8.11 The Surefire Module (P/N 528-028-02 only) may be removed by unsoldering all wires from its terminals, removing the RTV silicone securing wires to cover, and removing the nut (7.16) from screw (7.17). The module is assembled with RTV silicone between it and the solenoid cover so light prying will be necessary to remove it.

8.12 Note the orientation of solenoid cam and remove three screws and washers. To remove safety wire, cut, don't pull with excessive force.

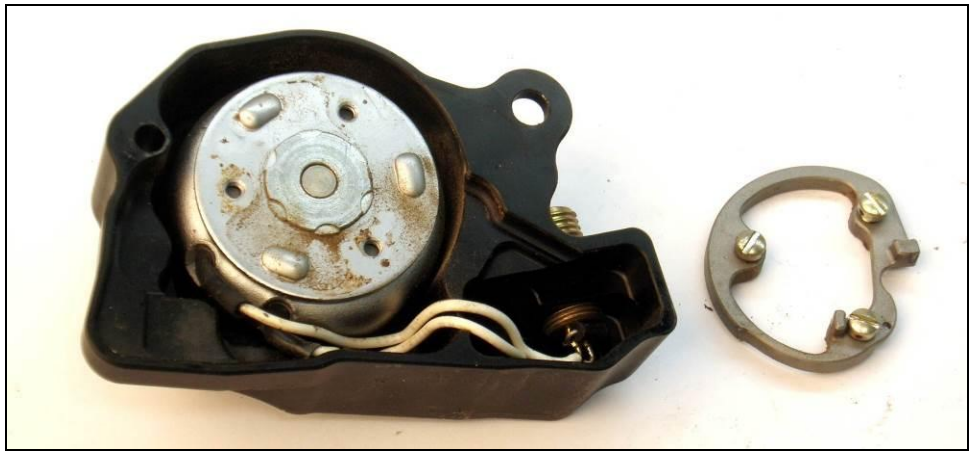

8.13 Remove the attach bushings (4.1 and 5.1) by pressing them out of the side plates.

8.14 Other bushings and bearings may be removed from detail parts by conventional means.

8.15 Do not typically disassemble the load beam (1.2) from the load beam shaft (1.1).

9.0 Inspection Instructions

9.1 Thoroughly clean all parts to be inspected using standard methods. Parts should be completely free of surface contaminants, soils or grease before beginning inspections.

9.2 If the Cargo Hook is being overhauled, perform nondestructive inspection on the parts below to confirm absence of surface cracks which may have developed in service. Confirmed cracks of any size are cause for part replacement.

For the **Side Plate, Solenoid (5.2)** and **Side Plate, Manual Release (4.2)**, inspect using:

- Liquid penetrant inspection per ASTM E1417

Mark all indications and then interpret each under 10X magnification. Differentiate surface cracks from other non-relevant indications such as machine tool marks, scratches, dents or superficial corrosion.

9.3 Carefully inspect detail parts in accordance with the instructions in Table 9.1. Inspect the parts in a clean, well-lit room using standard dimensional measuring tools and visual methods. Repair parts found within inspection limits. Replace any part found beyond limits.

Table 9.1, Cargo Hook Inspection Criteria

Seq	Component	Inspection Criteria & Limit	Repair Action	Finish	Recommended replacement at overhaul
1.	Load Beam Assembly (1.1, 1.2), Toggle Assembly (6.2)	Surface cracks – inspect under illuminated magnification (minimum 2X / 4 diopter).	None. Cracks of any size are cause for part replacement.	N/A	No
2.	Load Beam Assembly (1) Manual Release Lever (3.1) Solenoid Cam (7.2) Armor Plate (8, 9)	Corrosion – 0.006 in. (0.127 mm) deep	Glass bead blast at less than 30 PSI (2.11 KGF/CM^2) to remove corrosion.	Passivate per AMS-QQ-P-35 or ASTM A967	No
3.	Load Beam Assembly (1.1, 1.2)	Load Beam Shaft has moved axially within with Load Beam - .393 in. ± .015 (ref. Figure 9.1)	Press out Load Beam Shaft, clean mating surfaces, and press in with Loctite 680 retaining compound to depth shown in Figure 9.1.	N/A	No

Seq	Component	Inspection Criteria & Limit	Repair Action	Finish	Recommended replacement at overhaul
4.	Side Plate (4.2, 5.2)	See Figure 9.3	Blend at 10:1 ratio as required to provide smooth transitions.	Apply alodine (MIL-DTL-5541) and primer (MIL-PRF-23377 or similar) to affected surfaces – see Note 1	No
5.	Side Plate (4.2, 5.2)	Wear or deformation of top attach bushing hole ID – 0.6264 in (15.91 mm)	None	N/A	No
6.	Manual Release Cover (10) Solenoid Cover (7.3)	Dents, nicks, cracks, gouges, scratches and corrosion – 0.020 in. (0.50 mm) deep	Blend at 10:1 ratio as required to provide smooth transitions.	Apply alodine (MIL-DTL-5541) and primer (MIL-PRF-23377 or similar) to affected surfaces – see Note 1.	No
7.	Bearing (2.6, 2.7, 3.2, 4.6, 5.4, 6.5)	Wear – more than 50% copper showing	None	N/A	Yes
8.	Bearing (6.6)	Roughness, binding, looseness, or corrosion	None	N/A	Yes
9.	Attach Bushing (4.1, 5.1)	Wear on ID – 0.520 in. (13.208 mm)	None	N/A	Yes
10.	Bumper (26)	Denting, cuts or abrasions – 0.060 in. (1.27 mm) deep	None	N/A	Yes
11.	Armor Plate (8, 9)	Gouges and nicks – 0.050 in. (1.27 mm) deep	Blend at 10:1 ratio to provide smooth transitions.	Passivate per AMS-QQ-P-35 or ASTM A967	No
12.	Cam Assembly (2)	See Figure 9.4	None	N/A	Yes
13.	Cam Assembly (2)	Roughness, binding or looseness of the Interlock Roller (2.1)	Replace Interlock Pin (2.4), Roller (2.1), and Bearings (2.7)	N/A	Yes
14.	Toggle Assembly (6)	Roughness, binding or looseness of the Load Beam Roller (6.1)	Replace Pin (6.4), Roller (6.1), and Bearings (6.5)	N/A	No
15.	Cam Roller Pin (11)	Visible denting, corrosion	None	N/A	No

Seq	Component	Inspection Criteria & Limit	Repair Action	Finish	Recommended replacement at overhaul
16.	Load Beam (1.2)	See Figure 9.2.	Blend at 10:1 ratio to provide smooth transitions and ensure load rings will not hang up on load beam during release.	Passivate per AMS-QQ-P-35 or ASTM A967	No
17.	Serial Number Plate (7.1)	Damaged or illegible	None.	N/A	No
18.	Solenoid (7.6)	Shorted or open electrical circuit. Resistance across connector pins to be 3.0 to 4.0 ohms.	None	N/A	No
19.	Surefire Module (7.15) (P/N 528-028-02 only)	Bent or corroded terminals.	None.	N/A	No
20.	Solenoid Cam (7.2)	Any measurable wear to cam surfaces	None	N/A	No
21.	Electrical connector (7.5) (N/A for 528-028-01, -05, -06, and -58)	Loose, missing, or mutilated contact pins, cracked case, or worn insulator.	None	N/A	No
22.	Switch (7.22) (P/N 528-028-11 only)	Continuity when actuated and open circuit when not actuated.	None	N/A	No
23.	Switch Actuator (31) (P/N 528-028-11 only)	Roughness, binding or looseness of the roller.	None	N/A	No
24.	Bumper (33) (P/N 528-028-03 only)	Gouges or abrasions – 0.060 in. (1.27 mm) deep	None	N/A	No
25.	Solenoid Pigtail (7.10) (P/N 528-028-01, -05, -06, and -58 only)	Worn or chafed sleeving/insulation which exposes conductors. Broken or missing pins on connector.	None	N/A	No
26.	Rigging Warning Decal (1)	Illegible	None	N/A	Yes
27.	Springs (27)	Cracks or deformation	None	N/A	Yes
28.	Electrical wiring	Deterioration	None	N/A	No

Seq	Component	Inspection Criteria & Limit	Repair Action	Finish	Recommended replacement at overhaul
29.	All remaining nuts, bolts, roll pins, cotter pins, washers, heli-coils	Wear, corrosion or deterioration	None	N/A	Yes

Note 1 – For service at Onboard Systems, optional finish: black anodize per MIL-A-8625 Type II, Class 2 after nondestructive inspection. Prepare for anodize by using standard methods.

Figure 9.1 Load Beam Shaft Depth

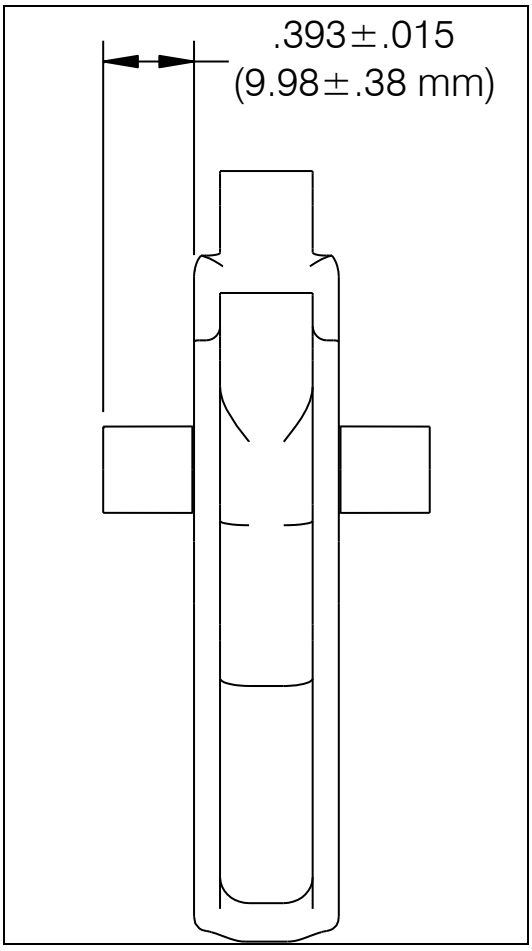

Figure 9.2 Load Beam Wear, Gouges, and Nicks

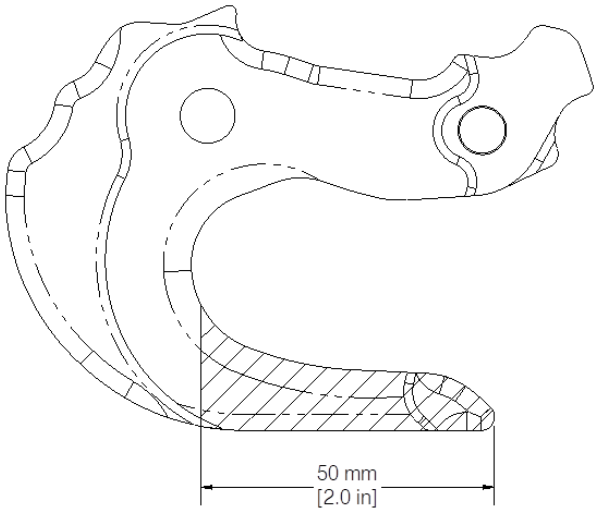

Shaded area - Wear, gouges and nicks – 0.050 in. (1.27 mm) deep.

Non-shaded area - Wear, gouges and nicks – 0.010 in. (0.25 mm) deep.

Figure 9.3 Side Plate, Additional Inspection Criteria

Side Plate, Manual (4.2)

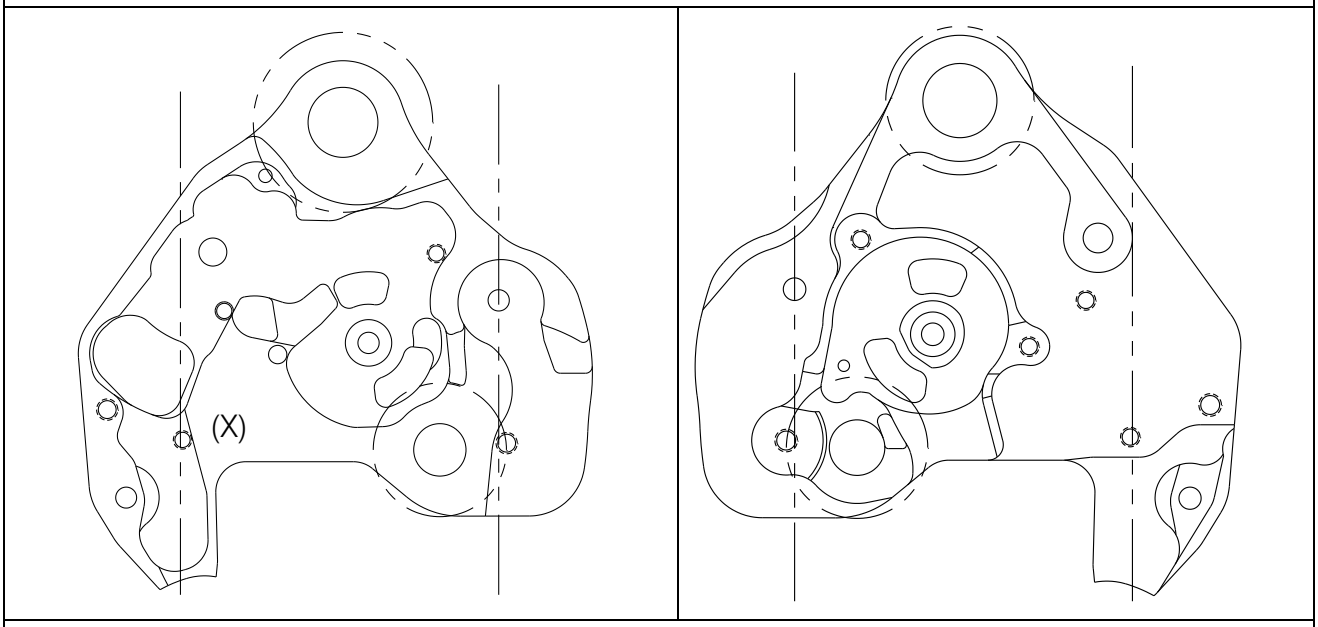

Side Plate, Solenoid (5.2)

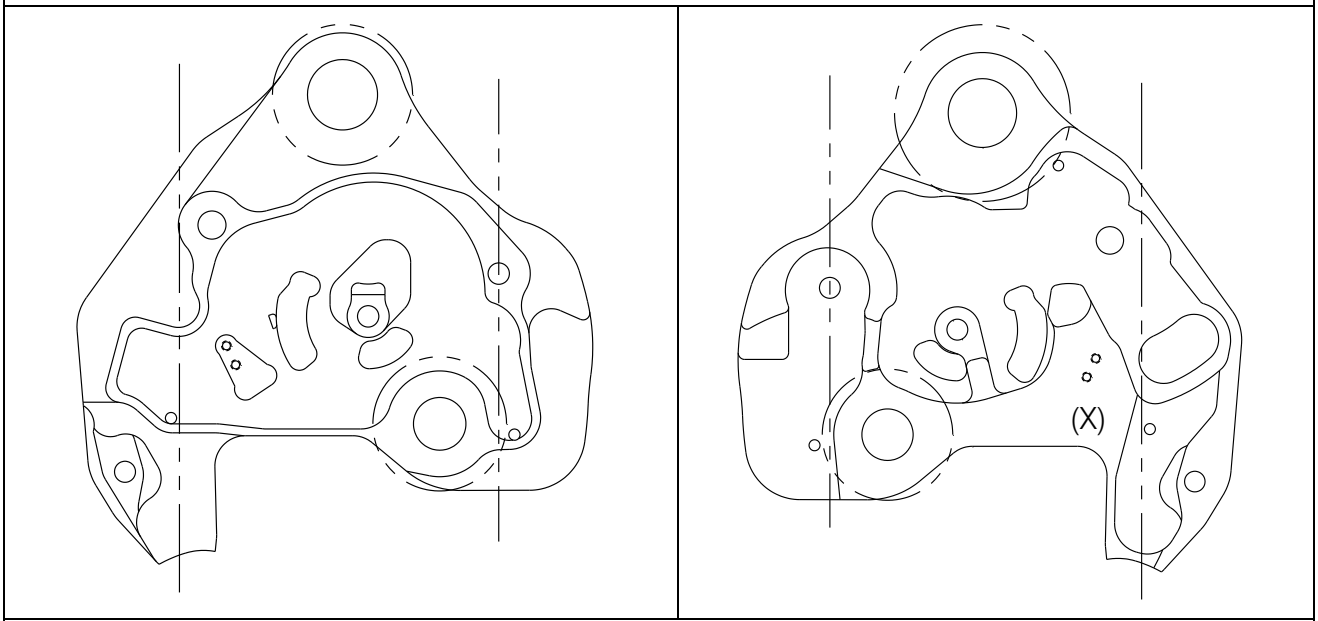

Inspection Criteria and Limits

Inside dashed circles – NO corrosion allowed.
Inside dashed circles – Dents, nicks, gouges, and scratches – 0.005 in (0.13 mm) deep.
Inside dashed lines – Dents, nicks, gouges, scratches, and corrosion – 0.010 in (0.25 mm) deep.
Outside dashed lines– Dents, nicks, gouges, scratches, and corrosion – 0.020 in (0.50 mm) deep.

(X) Approved metal stamp locations

Figure 9.4 Cam Assembly (3) Inspection Criteria

WARNING

Thoroughly inspect surfaces inside lines for signs of visible wear, dents, corrosion, gouges or nicks. Continued use of a damaged cam may cause inadvertent load release.

WARNING

Repair (including filing, deburring and buffing) is prohibited on all surfaces shown inside lines. Alterations of these surfaces may cause inadvertent load release.

Figure 9.4.1

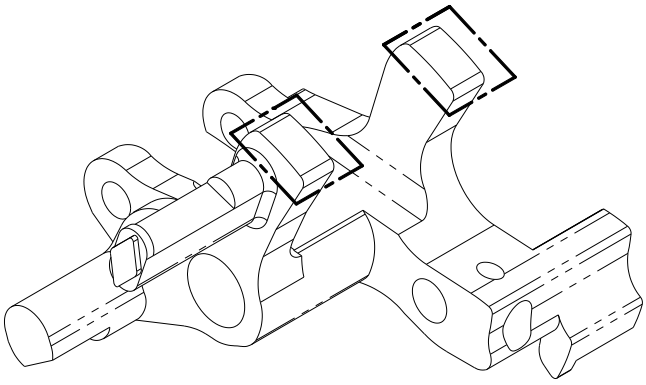

Figure 9.4.2

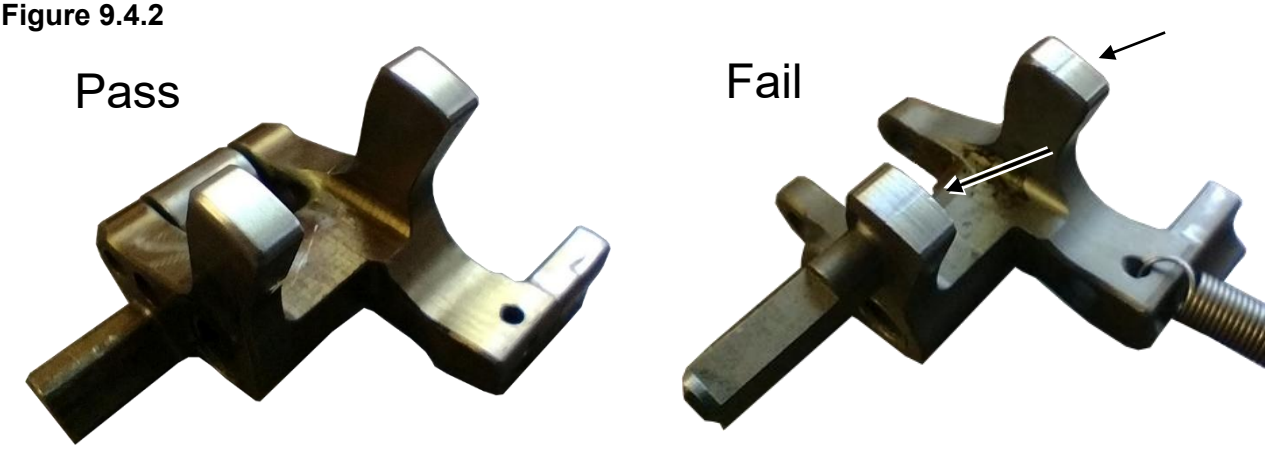

Continued on next page.

Figure 9.4.3

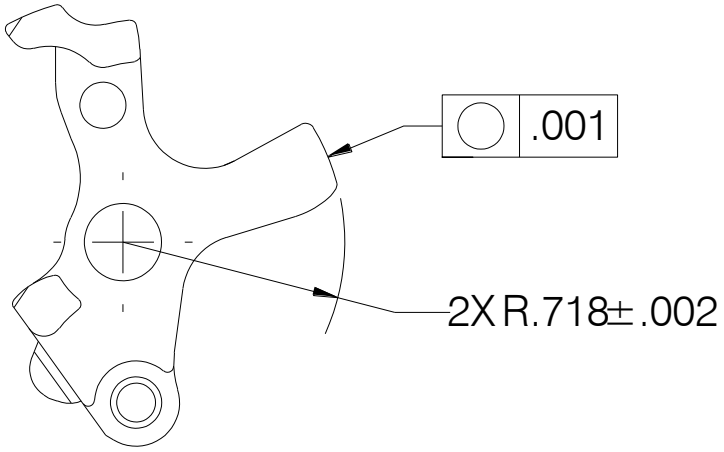

Inspection Criteria and Limits

Inside lines, see figure 9.4.1, gently clean surface by hand using Scotch-Brite (MFG: 3M, MFG P/N: 7447).

Visually inspect surface. No dents, corrosion, gouges, or nicks may remain after cleaning, see figure 9.4.2.

If the cam passes visual inspection, dimensionally inspect per figure 9.4.3.

10.0 Re-assembly Instructions

10.1 Replace all parts found to be unserviceable or beyond limits.

10.2 Measure the top attach bushing hole of side plates (4.2) and (5.2) with a bore gauge to determine if the standard attach bushing (4.1, 5.1) is appropriate or if an oversize attach bushing P/N 290-294-01 is required. The oversize attach bushing P/N 290-294-01 may be distinguished from the standard attach bushing by the presence of a groove on the OD.



10.3 Install correct attach bushing into side plates (4.2) and (5.2) as follows.

If top attach hole measures:	Use attach bushing:	Installation
Less than .6257 in (15.893 mm) .6264 - .6270 in (15.910 – 15.926 mm)	P/N 290-294-00 (4.1, 5.1) P/N 290-294-01* * Oversized Attach Bushing P/N 290-294-01 is identified by a groove on its OD as shown. 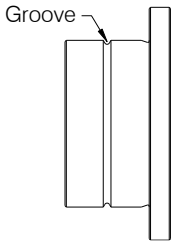	Install with wet primer using an arbor press. Ensure a continuous fillet seal of primer around bushing flange after installation.
.6257 - .6263 in (15.893 – 15.908 mm) .6271 - .6285 in (15.928 – 15.954 mm)	P/N 290-294-00 (4.1, 5.1) P/N 290-294-01	Install with Loctite 680 adhesive using an arbor press. Ensure a continuous fillet seal of adhesive around bushing flange after installation.

Install bearings (4.6, 5.4) into side plates (4.2, 5.2) using an arbor press. Install flush to inside surface of side plate. Splits in bearings must be oriented towards the top of the hook.



Bearing detail

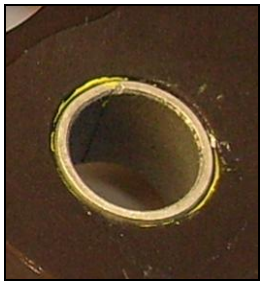

10.4 Install helicoils (4.4, 4.5) into manual release side plate (4.2).

10.5 Install roll pin (5.3) into side plate (5.2) using an arbor press.

10.6 Install roll pin (4.3) into side plate (4.2) using an arbor press.

10.7 Install bearing (3.2) into manual release lever (3.1) using an arbor press.

10.8 Install toggle bearings (6.5, 6.6) into toggle (6.2). Use a MIL-PRF-23827 Type I (e.g. – Mobilgrease 33) or MIL-PRF-23827 Type II (e.g. - AeroShell 7) grease on the roller bearing (6.6). If load beam roller (6.1, 6.5) was disassembled, install bearings (6.5) into roller (6.1) and assemble onto toggle with clevis pin (6.4) and secure clevis pin with cotter pin (6.3). **Clevis pin (6.4) must be installed in the orientation shown.**

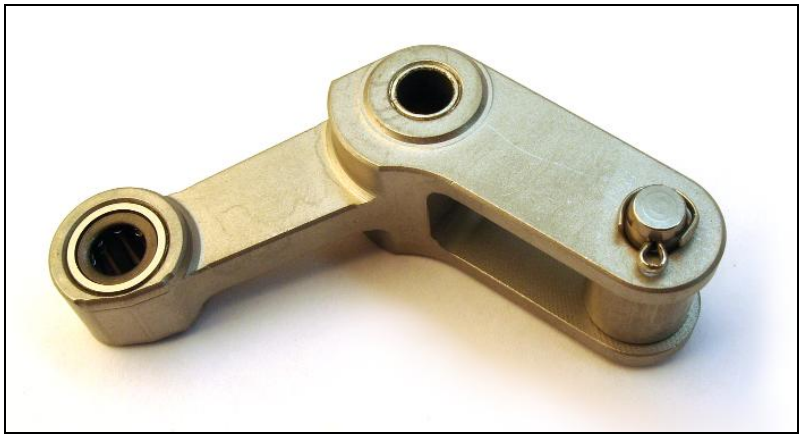

10.9 If cam assembly (2) was disassembled; install cam bearings (2.6) into cam (2.2) using an arbor press. Install bearings (2.7) into interlock roller (2.1) using arbor press and assemble onto cam with clevis pin (2.4) and secure clevis pin with cotter pin (2.3). Attach spring (2.5) to cam.



10.10 If solenoid (7.6), diode (7.4), and connector (7.5) were disassembled, solder the solenoid wires to connector pins A and B and then solder the diode across these pins (applicable to Cargo Hook P/Ns 528-028-00, 528-028-03, 528-028-55, 528-028-57 and 528-028-65 only, see step 10.11 for P/Ns 528-028-01, 528-028-02, 528-028-05, 528-028-06, and 528-028-58).

For cargo hook P/N 528-028-11 solder the wires from the switch (7.22) to pins C and D of the connector.

Apply Loctite 598 RTV silicone to the solenoid mounting studs and install solenoid into solenoid cover (7.3). Place S/N Tag (7.1) over mounting studs and secure with two washers (7.8) and nuts (7.7). Torque nuts to 20-25 in-lb plus drag torque.

10.11 **For cargo hook P/N 528-028-02** solder the wires from the solenoid to the inner two terminals of the Surefire Module (7.15). Route each wire from the connector to the Surefire Module through a ferrite cable core (7.18) twice. Solder the wire from connector pin B to the INPUT terminal (terminal located farthest from the connector) of the Surefire Module and solder the wire from connector pin A to the GND terminal, see schematic below. Use Loctite 598 RTV silicone on the ferrite cable cores to secure them to the inside of the cover.

If the Surefire Module was removed, apply a small amount of Loctite 598 RTV silicone to its faying surface with the solenoid housing and re-install it with the screw (7.17) and nut (7.16).

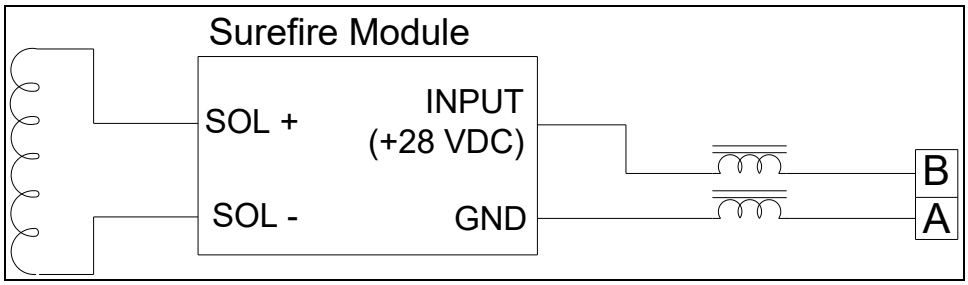

For cargo hook P/Ns 528-028-01, 528-028-05, 528-028-06 and 528-028-58 solder the solenoid wires to the wires from the electrical pigtail and solder the diode across these joints. Cover diode and exposed leads with heat shrink tubing.

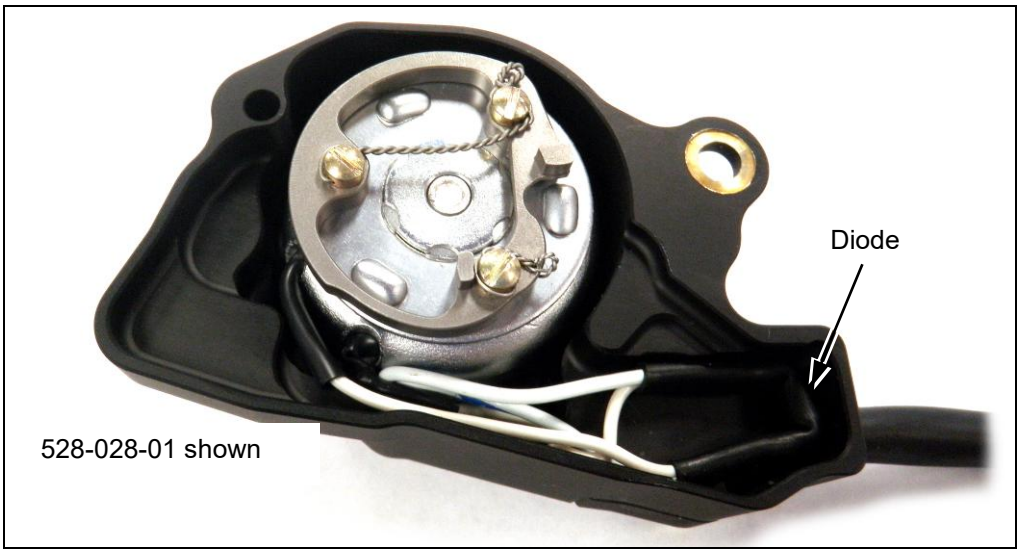

10.12 Apply Loctite 262 Threadlocker to three screws (7.9) and install solenoid cam (7.2) onto solenoid (7.6). Safety wire the three screws as shown below.

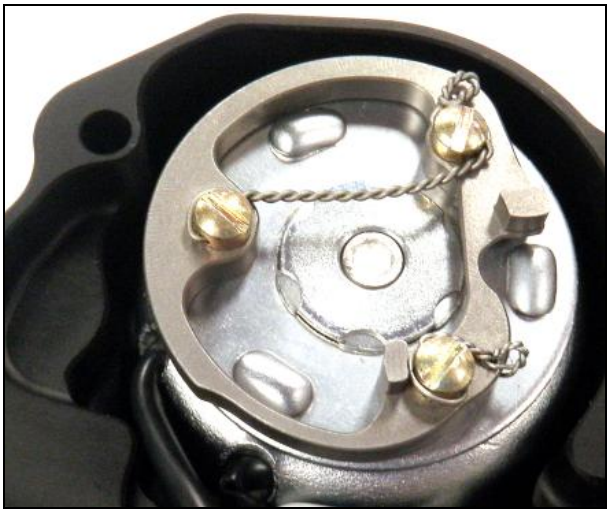

10.13 Insert bolt (13) through Side Plate Assembly (5). Ensure bolt head engages with the anti-rotation flat on the side plate.

10.14 Apply grease to indicated surfaces.

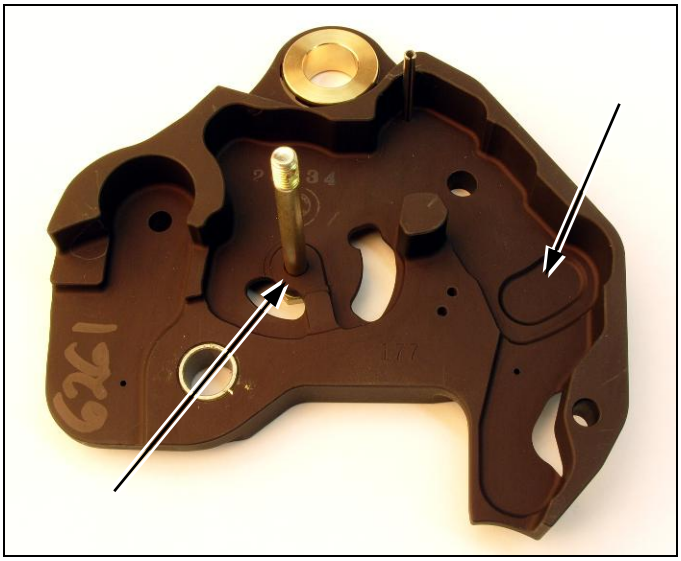

10.15 Install Cam Assembly (2) over the bolt (13) and connect cam spring (2.5) to roll pin (5.3).



10.16 Install Load Beam Assembly (1) by turning the Cam Assembly clockwise and setting the load beam into place.



10.17 Grease the Cam Roller Pin (11) with MIL-PRF-23827 grease and insert into Toggle Assembly (6) roller bearing.



10.18 Pivot the load beam out of the way and position the Toggle Assembly (6) on the side plate.

⚠ WARNING

Verify that the Cam Roller Pin (11) is installed in the toggle assembly roller bearing, if the Cam Roller Pin is not installed it will cause cargo hook to not function properly and be damaged.



10.19 Insert the load beam bumper (26) into the pocket in the Side Plate Assembly.



10.20 Check for and remove FOD if present.

10.21 Place Side Plate Assembly (4) over the assembly, lining up the bolt (13), roll pin, and the load beam shaft.



10.22 Apply grease (MIL-PRF-23827) to the bottom of the spring pocket in Side Plate Assembly (4) where the spring will lay and install spring (27) and manual release lever assembly (3), per the figure below.

10.23 Install washer (24) and nut (14), tighten nut finger tight and rotate to next castellation to install cotter pin (19).

10.24 Install the second spring (27) as shown.

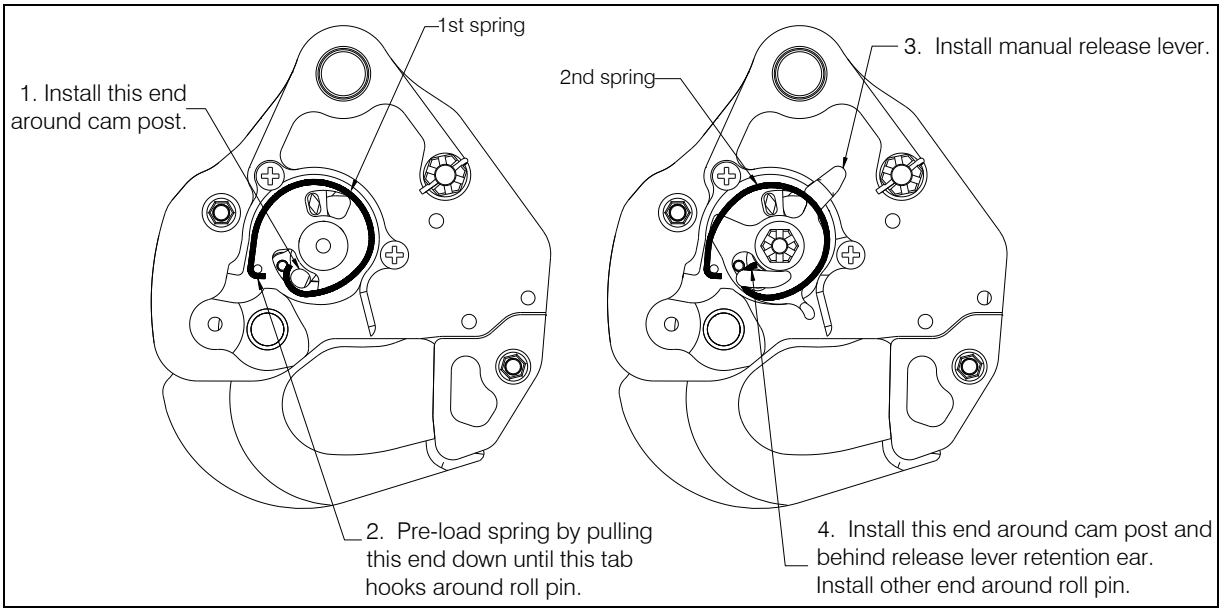



CAUTION

Both springs must be installed.

10.25 **For Cargo Hook P/Ns 528-028-04, 528-028-57, 528-028-58 & 528-028-65,** re-install the load beam grounding spring (29) by fastening with two screws (30).

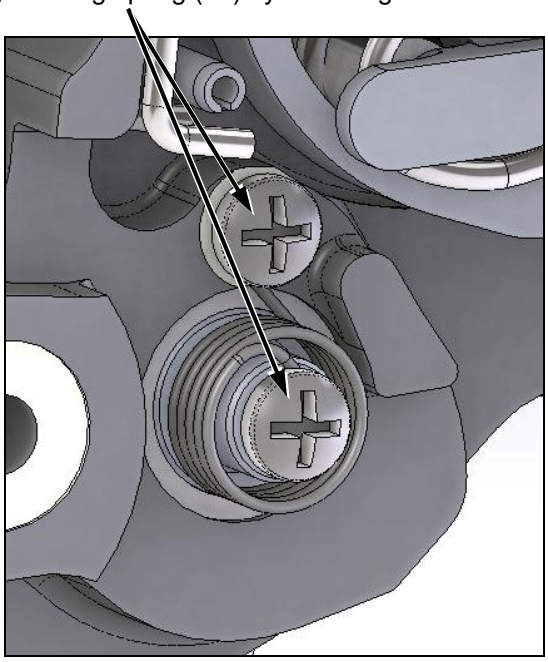

Torque screws to 10-12 in-lb. Center the spring so a gap exists between the load beam shaft and spring. Seal around screws with primer.

10.26 **For Cargo Hook P/N 528-028-11 only,** position the Solenoid Assembly (7) near the cargo hook and attach its switch (7.22) and Switch Actuator (31) to the Side Plate Assembly (5) with two screws (32). Install the two screws with Loctite 222 Threadlocker applied to threads.

10.27 Install Solenoid Assembly (7) onto Side Plate Assembly (5) and insert bolts (12, 21) through.

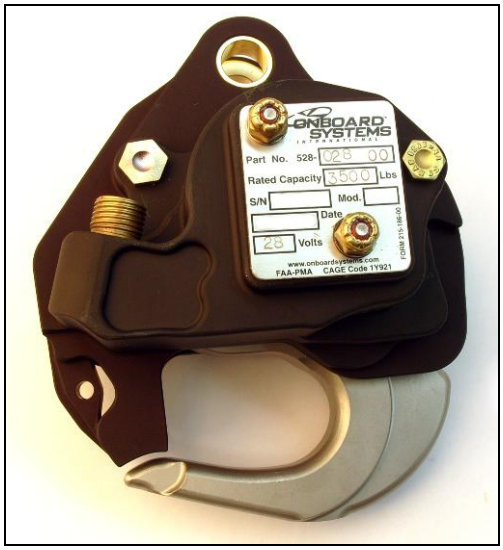

10.28 Install washer (16) and nut (20) over bolt (12). Tighten nut to finger tight then rotate to next castellation to install cotter pin (18).

10.29 Install washer (15) and nut (17) over bolt (21). Torque nut to 20-25 in-lb.

10.30 Install manual release cover (10) with screws (23).

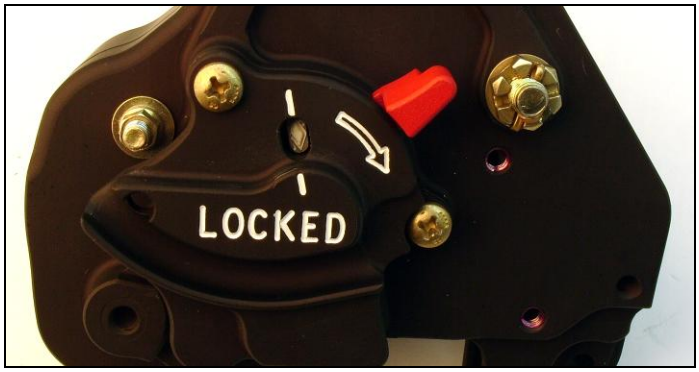

10.31 Coat faying surfaces of armor plates (8, 9) with a corrosion preventative compound. Install armor plates* (8, 9) with bolt (22) and nut (17). Torque nut to 35-40 in-lb.

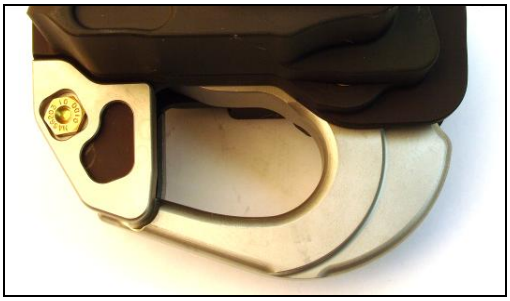



***For Cargo Hook P/N 528-028-03 only**, capture the bumper (33) between the extended lugs of its armor plates. Secure the bumper to the armor plates with bolt (34), washer (16), and nut (35). Torque nut to 75-95 in-lb.





10.32 With the hook locked, verify “LOCKED” lines on manual release cover are aligned with diamond shaped feature on cam.



10.33 Cycle manual release lever to open load beam and verify smooth operation of mechanism.

10.34 Perform Acceptance Test Procedures as listed in this manual.

10.35 Fill out and affix Overhaul Label (P/N 215-260-00).

528-028-00 shown



528-028-01 shown

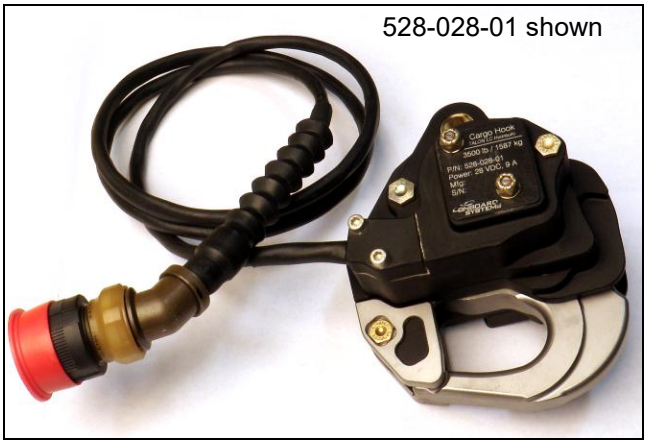

11.0 Acceptance Test Procedure

11.1 When the Cargo Hook is overhauled or the side plates (4.2 and 5.2) are separated, the Cargo Hook must be subjected to the following acceptance test procedure (ATP) before being returned to service.

11.2 Remove the slave cylinder assembly from the cargo hook (if present).

11.3 Examine the cargo hook externally for security of cotter pins and fasteners.

11.4 For all configurations except P/Ns 528-028-01, 528-028-05, 528-028-06, and 528-028-58, use an appropriate insulation resistance tester to test the resistance between pin A and pin B and the base of the connector (7.5). The readings should not be less than 2 mega-ohms.

11.5 For all configurations except P/N 528-028-02, use a multi-meter to check the resistance between pins A and B of the electrical connector, for P/Ns 528-028-05 and 528-028-06, check between pins G and C. Resistance should be 3 to 4 ohms.

11.6 For P/N 528-028-11 use a multi-meter to check for continuity between pins C and D of the connector. With the cargo hook load beam in the closed position there should be no continuity between these pins. Open the load beam and verify that there is continuity between these pins.

11.7 Suspend the hook from a test rig capable of loading the cargo hook to 8,750 pounds (3968 kg). Use a steel ring to apply the load to the load beam.

11.8 Connect an adjustable 20 – 28 VDC supply with a momentary release switch wired into the positive wire, to the connector, and an in-line current meter. Connect the negative lead to pin A and the positive lead to pin B. Set the voltage to 20 VDC ± 0.1.

11.9 With no load on the load beam, operate the manual release lever. The load beam should fall open and stay in the open position. Push the load beam up and closed. The load beam should automatically latch. Repeat step.

11.10 Check the electrical release function of the cargo hook.

For all configurations except 528-028-02 perform the following.

With no load on the load beam, release the cargo hook with the electrical release. The load beam should fall open and stay in the open position. Push the load beam up and closed. The load beam should automatically latch. Repeat step.

CAUTION

Damage to the cargo hook release solenoid can occur if the release switch is operated for more than 20 seconds continuously.

For the 528-028-02 configuration, perform the following.

NOTICE

P/N 528-028-02 cargo hook includes an electronic delay of approximately ½ second. It is necessary to press and hold the release switch.

Actuate the release switch very briefly without holding it down (less than ½ second). The load beam should remain closed and the mechanism should not audibly cycle.

Actuate and hold the release switch for a few seconds. The load beam should fall to the open position after approximately ½ second and then should continue to audibly cycle repeatedly.

11.11 Load a suitable load ring onto the load beam (1.2) and push up on the load beam until it latches. Gradually proof-load the cargo hook with the test rig to 8,750 pounds (3969 kg). Hold the load for 1 minute. The load beam should hold the load without unlatching. Reduce the load to zero.

CAUTION

Do not release the proof test load electrically or manually. Decrease the load gradually, using the test machine, after completion of the proof load test.

11.12 Load the cargo hook using a steel ring that is free to drop clear of the load beam. Gradually load the cargo hook to 3,500 pounds (1588 kg). Using a digital force gauge or equivalent, push on the lower tab of the manual release lever where the slave cylinder piston acts. The load beam should unlatch, and the steel ring should slide off the load beam. Verify the required release force is between 3.5 pounds (15.5 N) and 8 pounds (35.5 N). Repeat the test at 2000 pounds (907 kg) and 600 pounds (272 kg).

CAUTION

Use of a nylon sling is not recommended for load release tests as recoil may cause damage to the cargo hook.

11.13 Load the cargo hook using a steel ring that is free to drop clear of the load beam. Gradually load the cargo hook to 3,500 pounds (1588 kg). Press the electrical release button (press and hold for P/N 528-028-02). The load beam should unlatch, and the steel ring should slide off the load beam. Manually close the load beam and the hook lock indicator should align with the line on the manual release cover. Verify that the current draw is between 5 and 9 amps. The 528-028-02 configuration delivers this current in rapid pulses which may register as a lower current value on some ammeters due to averaging. Repeat the test at 2000 pounds (907 kg) and 600 pounds (272 kg).

11.14 Remove the Cargo Hook from the test stand.

11.15 **Specific to Cargo Hook P/N 528-028-04, 528-028-57, 528-028-58 & 528-028-65:** Test for continuity between the load beam and ground strap lug.

1. Using handheld multi-meter touch one probe against the load beam and the other to the ground strap lug (see below).
2. Make sure reading is less than 20 ohms.



11.16 End of Acceptance Test Procedure.

11.17 For service at Onboard Systems, optionally use the following Onboard Systems factory acceptance test procedures:

Acceptance Test Procedure	**Applicable P/Ns**
180-169-00	528-028-00, 528-028-02, 528-028-03, 528-028-04, 528-028-05, 528-028-06, 528-028-11, 528-028-55, 528-028-57, 528-028-58, 528-028-65, 528-028-69
180-181-00	528-028-01

12.0 Troubleshooting

12.1 The following section lists symptoms and probable causes to aid in equipment troubleshooting.

Symptom	Probable Cause	Remedy
Failure to operate electrically.	Damaged or defective diode (7.4) or solenoid (7.6).	Check for proper resistance across connector pins A and B (pins G and C for -05 and -06 cargo hooks) per section 11.5. If out of tolerance, remove the Solenoid Assembly (7) and disconnect the diode (7.4). Re-check for proper resistance. Replace diode (7.4) or solenoid (7.6) as necessary.
	Damaged or loose wiring.	Check for proper continuity across connector pins A and B (G and C for -05 and -06) per table 9.1 seq. 18. Remove the Solenoid Assembly (7) and repair wiring.
	Release switch not held down long enough (-02 only).	Hold the release switch for a longer time. The -02 cargo hook includes a Surefire Module (7.15) which incorporates an electronic delay of approximately ½ second after which time the cargo hook solenoid will activate repeatedly. If the release switch is not held down long enough the solenoid will not activate.
During the Acceptance Test Procedure, the manual release force exceeds requirements.	Friction in internal mechanism.	Check operation of unit using the manual release lever. Disassemble and inspect internal mechanism. Check all bearing joints for free movement. Check cam assembly (2) for denting/ damage. Check toggle roller and pin for denting/ damage. Replace as necessary.

13.0 Illustrated Parts List

13.1 Figure 13.1 below shows the base configuration of the 528-028 cargo hook series (P/N 528-028-00). Figure 13.2 through Figure 13.7 show configuration specific parts of P/N 528-028-01, 528-028-02, 528-028-03, 528-028-04, 528-028-05, 528-028-06, 528-028-11, 528-028-57 and 528-028-58.

Figure 13.1 Cargo Hook Parts

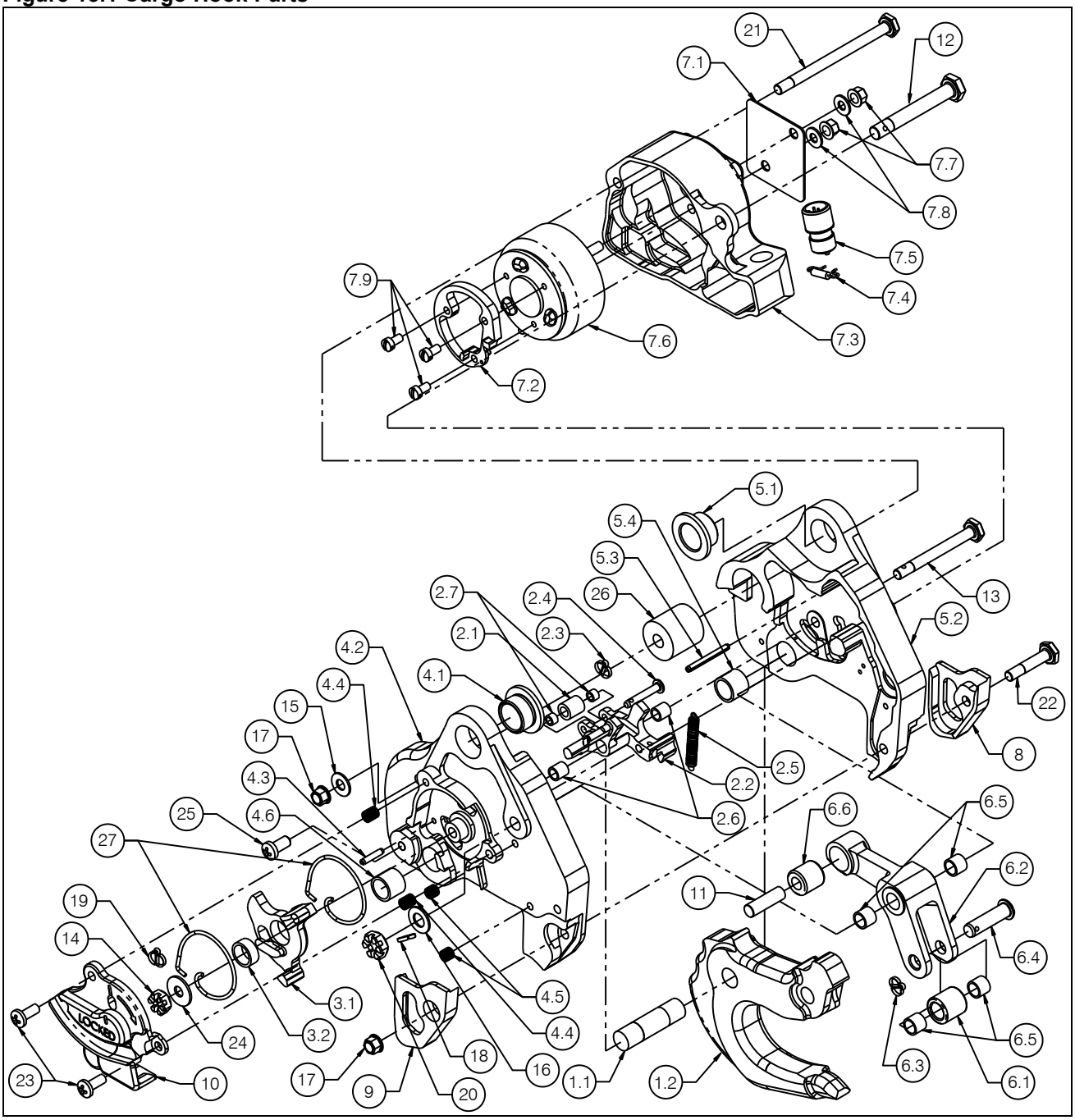

Figure 13.2 Cargo Hook Parts Specific to P/N 528-028-01

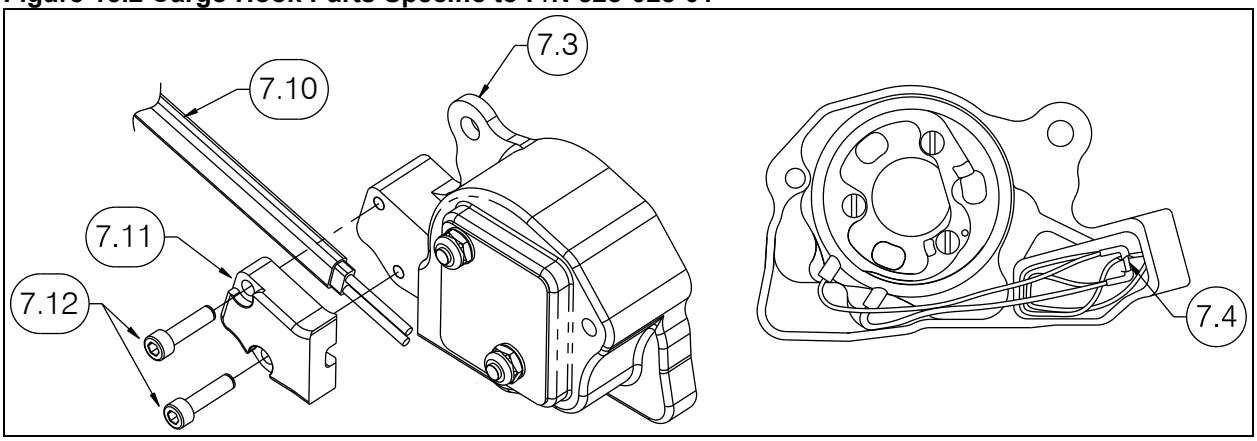

Figure 13.3 Cargo Hook Parts Specific to P/N 528-028-02

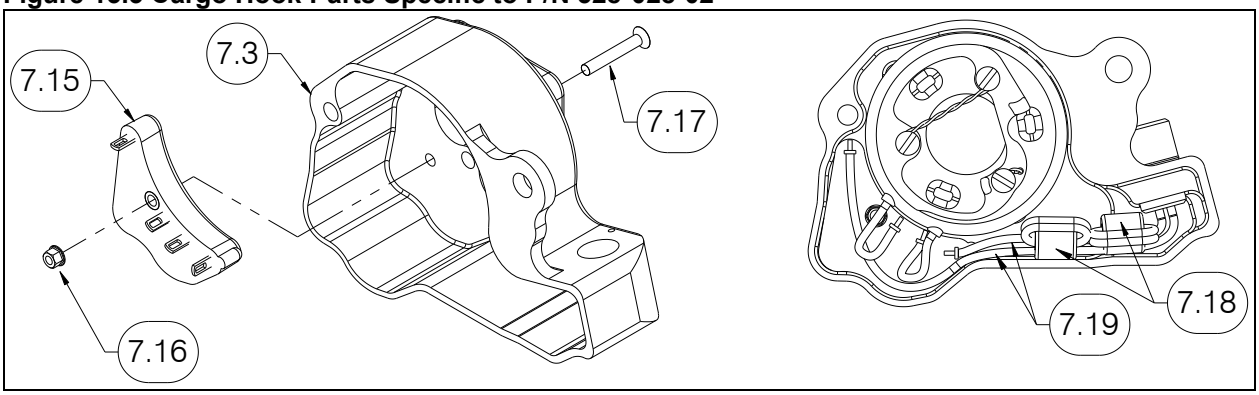

Figure 13.4 Cargo Hook Parts Specific to 528-028-58, 528-028-05, 528-028-06 (-58 shown)

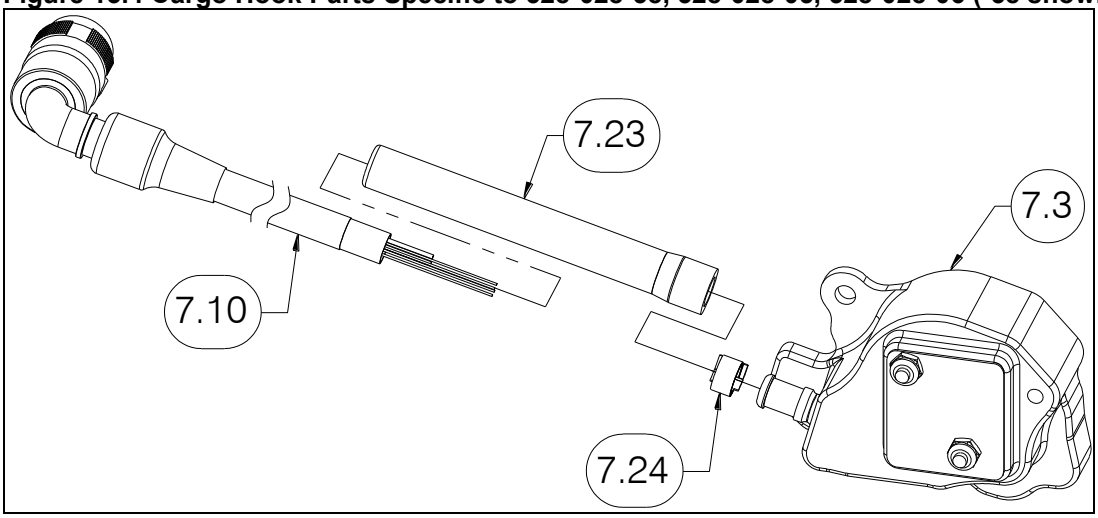

Figure 13.5 Cargo Hook Parts Specific to P/N 528-028-03

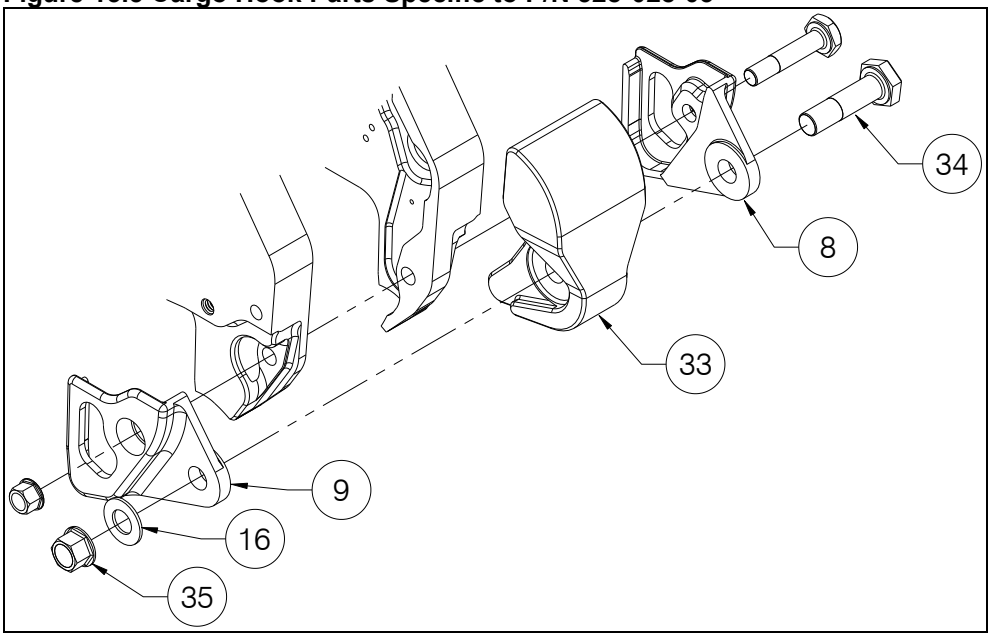

Figure 13.6 Cargo Hook Parts Specific to P/N 528-028-11

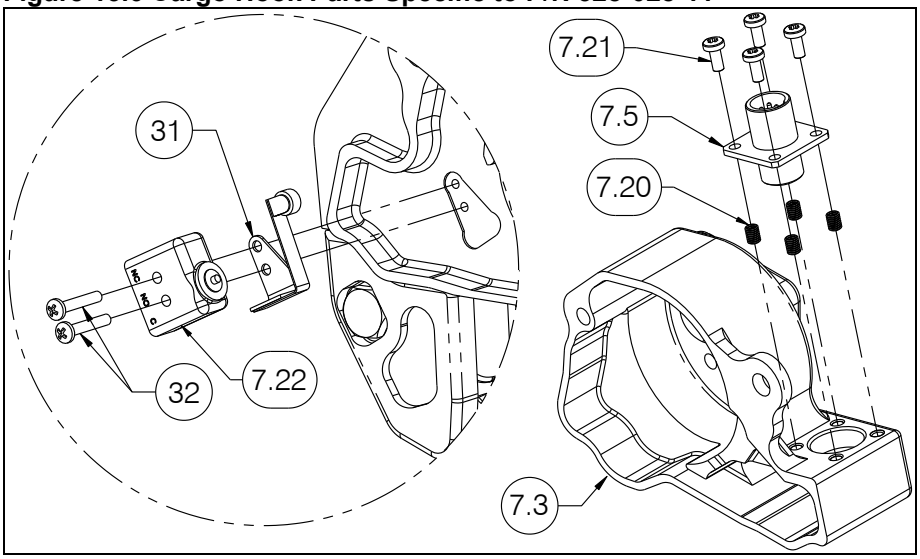

Figure 13.7 Cargo Hook Parts Specific to P/N 528-028-65

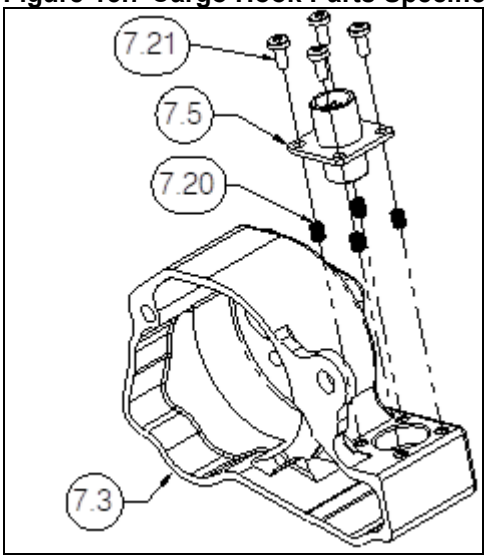

Figure 13.8 Cargo Hook Parts Specific to P/N 528-028-04, P/N 528-028-57, 528-028-58 & 528-028-65

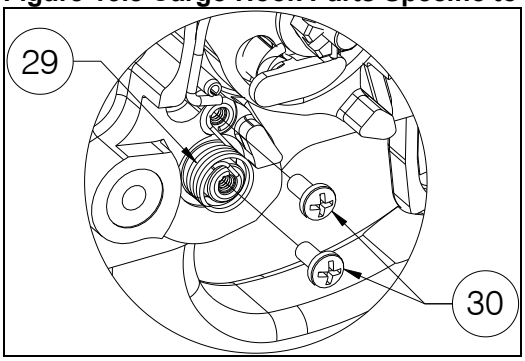

Table 13.1, Cargo Hook Parts

Item	Part No.	Description	528-028-00	528-028-01	528-028-02	528-028-03	528-028-04	528-028-05	528-028-06	528-028-11	528-028-55	528-028-57	528-028-58	528-028-65	528-028-69	Overhaul Kit 212-020-00	Overhaul Kit 212-071-00
1[1]	232-161-00	Load Beam Assembly	1	1	1	1	-	1	1	-	1	-	-	-	1	-	-
1[1]	232-161-01	Load Beam Assembly	-	-	-	-	-	-	-	1	-	-	-	-	-	-	-
1[1]	232-734-00	Load Beam Assembly	-	-	-	-	1	-	-	-	-	1	-	-	-	-	-
1[1]	232-734-01	Load Beam Assembly	-	-	-	-	-	-	-	-	-	-	1	1	-	-	-
1.1	290-640-00	Load Beam Shaft	1	1	1	1	-	1	1	1	1	-	-	-	1	-	-
1.1	291-915-00	Load Beam Shaft	-	-	-	-	1	-	-	-	-	1	-	-	-	-	-
1.1	291-915-01	Load Beam Shaft	-	-	-	-	-	-	-	-	-	-	1	1	-	-	-
1.2	290-831-00	Load Beam	1	1	1	1	1	1	1	-	1	1	1	1	1	-	-
1.2	290-831-01	Load Beam	-	-	-	-	-	-	-	1	-	-	-	-	-	-	-
2[1]	232-162-00	Cam Assembly	1	1	1	1	1	1	1	1	1	1	1	1	1	1	1
2.1	290-603-00	Roller	1	1	1	1	1	1	1	1	1	1	1	1	1	-	-
2.2	290-832-00	Cam	1	1	1	1	1	1	1	1	1	1	1	1	1	-	-
2.3	510-417-00	Cotter Pin	1	1	1	1	1	1	1	1	1	1	1	1	1	-	-
2.4	510-495-00	Pin	1	1	1	1	1	1	1	1	1	1	1	1	1	-	-
2.5	514-032-00	Spring	1	1	1	1	1	1	1	1	1	1	1	1	1	-	-
2.6	517-009-00	Bushing	2	2	2	2	2	2	2	2	2	2	2	2	2	-	-
2.7	517-031-00	Bushing	2	2	2	2	2	2	2	2	2	2	2	2	2	-	-
3[1]	232-182-01[2]	Manual Release Lever Assembly	1	1	1	1	1	1	1	1	1	1	1	1	1	-	-
3.1	290-869-01	Manual Release Lever	1	1	1	1	1	1	1	1	1	1	1	1	1	-	-
3.2	517-054-00	Bearing	1	1	1	1	1	1	1	1	1	1	1	1	1	1	1
4[1]	232-183-00	Side Plate Assembly, Manual Release	1	1	1	1	1	1	1	1	1	-	1	-	-	-	-

Item	Part No.	Description	528-028-00	528-028-01	528-028-02	528-028-03	528-028-04	528-028-05	528-028-06	528-028-11	528-028-55	528-028-57	528-028-58	528-028-65	528-028-69	Overhaul Kit 212-020-00	Overhaul Kit 212-071-00
4[1]	232-183-01	Side Plate Assembly, Manual Release	-	-	-	-	1	-	-	-	-	1	1	1	-	-	-
4.1	290-294-00	Attach Bushing	1	1	1	1	1	1	1	1	1	1	1	1	1	1	1
4.2	290-870-00	Side Plate, Manual Release	1	1	1	1	-	1	1	1	1	-	1	1	1	-	-
4.2	290-870-01	Side Plate, Manual Release	-	-	-	-	1	-	-	-	-	1	1	1	-	-	-
4.3	510-203-00	Roll Pin	1	1	1	1	1	1	1	1	1	1	1	1	1	1	1
4.4	510-210-00	Helicoil	2	2	2	2	2	2	2	2	2	2	2	2	2	2	2
4.5	510-522-00	Helicoil	2	2	2	2	2	2	2	2	2	2	2	2	2	2	2
4.6	517-010-00	Bearing	1	1	1	1	1	1	1	1	1	1	1	1	1	1	1
5[1]	232-184-00	Side Plate Assembly, Solenoid	1	1	1	1	1	1	1	1	1	1	1	1	1	-	-
5.1	290-294-00	Attach Bushing	1	1	1	1	1	1	1	1	1	1	1	1	1	1	1
5.2	290-871-00	Side Plate, Solenoid	1	1	1	1	1	1	1	1	1	1	1	1	1	-	-
5.3	510-202-00	Roll Pin	1	1	1	1	1	1	1	1	1	1	1	1	1	1	1
5.4	517-010-00	Bearing	1	1	1	1	1	1	1	1	1	1	1	1	1	1	1
6[1]	232-185-00	Toggle Assembly	1	1	1	1	1	-	-	1	1	1	-	-	1	-	-
6[1]	232-185-01	Toggle Assembly	-	-	-	-	-	1	1	-	-	-	1	-	-	-	-
6[1]	232-185-02	Toggle Assembly	-	-	-	-	-	-	-	-	-	-	-	1	-	-	-
6.1	290-438-00	Load Beam Roller	1	1	1	1	1	1	1	1	1	1	1	-	1	-	-
6.1	290-438-01	Load Beam Roller	-	-	-	-	-	-	-	-	-	-	-	1	-	-	-
6.2	290-838-00	Toggle	1	1	1	1	1	1	1	1	1	1	1	1	1	-	-
6.3	510-417-00	Cotter Pin	1	1	1	1	1	1	1	1	1	1	1	1	1	1	1

Item	Part No.	Description	528-028-00	528-028-01	528-028-02	528-028-03	528-028-04	528-028-05	528-028-06	528-028-11	528-028-55	528-028-57	528-028-58	528-028-65	528-028-69	Overhaul Kit 212-020-00	Overhaul Kit 212-071-00
6.4	510-494-00	Clevis Pin	1	1	1	1	1	-	-	1	1	1	-	-	1	1	-
6.4	509-004-00	QSF Load Beam Roller Clevis Pin	-	-	-	-	-	1	1	-	-	-	1	1	-	-	1
6.5	517-021-00	Bushing	4	4	4	4	4	4	4	4	4	4	4	4	4	4	4
6.6	517-060-00	Bearing	1	1	1	1	1	1	1	1	1	1	1	1	1	1	1
7[1]	232-186-00	Solenoid Assembly	1	-	-	1	-	-	-	1	-	-	-	-	-	-	-
7[1]	232-186-01	Solenoid Assembly	-	-	1	-	-	-	-	-	-	-	-	-	-	-	-
7[1]	232-186-02	Solenoid Assembly, Surefire Upgrade[5]	-	-	Opt	-	-	-	-	-	-	-	-	-	-	-	-
7[1]	232-279-00	Solenoid Assembly	-	1	-	-	-	-	-	-	-	-	-	-	-	-	-
7[1]	232-492-00	Solenoid Assembly	-	-	-	-	-	-	-	-	1	-	-	-	-	-	-
7[1]	232-492-01	Solenoid Assembly	-	-	-	-	-	-	-	-	-	-	-	1	-	-	-
7[1]	232-735-00	Solenoid Assembly	-	-	-	-	-	-	-	-	-	1	-	-	-	-	-
7[1]	232-759-00	Solenoid Assembly	-	-	-	-	-	-	-	-	-	-	-	-	1	-	-
7[1]	232-792-00	Solenoid Assembly	-	-	-	-	-	-	-	1	-	-	-	-	-	-	-
7[1]	232-802-00	Solenoid Assembly	-	-	-	1	-	-	-	-	-	-	-	-	-	-	-
7[1]	232-842-00	Solenoid Assembly	-	-	-	-	-	-	-	-	-	-	1	-	-	-	-
7[1]	232-843-00	Solenoid Assembly	-	-	-	-	1	-	-	-	-	-	-	-	-	-	-
7[1]	232-893-00	Solenoid Assembly	-	-	-	-	-	1	-	-	-	-	-	-	-	-	-
7[1]	232-901-00	Solenoid Assembly	-	-	-	-	-	-	1	-	-	-	-	-	-	-	-
7.1	215-186-00	Serial Plate	-	1	-	-	-	-	-	-	-	-	-	-	-	-	-
7.1	215-247-00	Serial Plate	1	-	-	1	-	-	-	1	-	-	-	-	-	-	-
7.1	215-267-00	Serial Plate	-	-	-	-	-	-	-	-	1	-	-	-	-	-	-

Item	Part No.	Description	528-028-00	528-028-01	528-028-02	528-028-03	528-028-04	528-028-05	528-028-06	528-028-11	528-028-55	528-028-57	528-028-58	528-028-65	528-028-69	Overhaul Kit 212-020-00	Overhaul Kit 212-071-00
7.1	215-267-01	Serial Plate	-	-	-	-	-	-	-	-	-	-	-	1	-	-	-
7.1	215-334-00	Serial Plate	-	-	1	-	-	-	-	-	-	-	-	-	-	-	-
7.1	215-334-10	Serial Plate	-	-	Opt	-	-	-	-	-	-	-	-	-	-	-	-
7.1	215-340-00	Serial Plate	-	-	-	-	-	-	-	-	-	1	-	-	-	-	-
7.1	215-357-00	Serial Plate	-	-	-	-	-	-	-	-	-	-	-	-	1	-	-
7.1	215-370-00	Serial Plate	-	-	-	-	-	-	-	1	-	-	-	-	-	-	-
7.1	215-378-00	Serial Plate	-	-	-	1	-	-	-	-	-	-	-	-	-	-	-
7.1	215-405-00	Serial Plate	-	-	-	-	-	-	-	-	-	-	1	-	-	-	-
7.1	215-409-00	Serial Plate	-	-	-	-	1	-	-	-	-	-	-	-	-	-	-
7.1	215-446-00	Serial Plate	-	-	-	-	-	1	-	-	-	-	-	-	-	-	-
7.1	215-449-00	Serial Plate	-	-	-	-	-	-	1	-	-	-	-	-	-	-	-
7.2	290-835-00	Solenoid Cam	1	1	1	1	1	1	1	1	1	1	1	1	1	-	-
7.3	290-872-00	Solenoid Cover	1	-	1	1	1	-	-	1	1	1	-	-	1	-	-
7.3	291-114-00	Solenoid Cover	-	1	-	-	-	-	-	-	-	-	-	-	-	-	-
7.3	292-003-00	Solenoid Cover	-	-	-	-	-	-	-	1	-	-	-	1	-	-	-
7.3	292-095-00	Solenoid Cover	-	-	-	-	-	1	1	-	-	-	1	-	-	-	-
7.4	340-035-00	Diode	1	1	1	1	1	1	1	1	1	1	1	1	1	-	-
7.4	340-027-00[3]	Diode	1	-	-	-	-	-	-	-	-	-	-	-	-	-	-
7.5	410-215-00	Connector	1	-	1	1	1	-	-	1	1	1	-	-	1	-	-
7.5	410-930-00	Connector	-	-	-	-	-	-	-	-	-	-	-	1	-	-	-
7.6	455-003-00	Solenoid	1	1	1	1	1	1	1	1	1	1	1	1	1	-	-
7.7	510-206-00	Nut	2	2	2	2	2	2	2	2	2	2	2	2	2	2	2

Item	Part No.	Description	528-028-00	528-028-01	528-028-02	528-028-03	528-028-04	528-028-05	528-028-06	528-028-11	528-028-55	528-028-57	528-028-58	528-028-65	528-028-69	Overhaul Kit 212-020-00	Overhaul Kit 212-071-00
7.8	510-209-00	Washer	2	2	2	2	2	-	-	2	2	2	-	2	2	2	-
7.9	510-379-00	Screw	3	3	3	3	3	3	3	3	3	3	3	3	3	3	3
7.10	270-140-00	Solenoid Pigtail	-	1	-	-	-	-	-	-	-	-	-	-	-	-	-
7.10	270-293-00	Solenoid Pigtail	-	-	-	-	-	-	-	-	-	-	1	-	-	-	-
7.10	270-308-00	Solenoid Pigtail	-	-	-	-	-	1	-	-	-	-	-	-	-	-	-
7.10	270-315-00	Solenoid Pigtail	-	-	-	-	-	-	1	-	-	-	-	-	-	-	-
7.11	291-400-00	Cable Clamp	-	1	-	-	-	-	-	-	-	-	-	-	-	-	-
7.12	510-787-00	Screw	-	2	-	-	-	-	-	-	-	-	-	-	-	-	-
7.13	510-562-00	Nylon Screw [4]	-	-	-	-	-	-	-	-	-	-	-	-	-	1	-
7.14	510-563-00	Nylon Washer [4]	-	-	-	-	-	-	-	-	-	-	-	-	-	1	-
7.15	232-727-00	Surefire Module	-	-	1	-	-	-	-	-	-	-	-	-	-	-	-
7.16	510-922-00	Nut	-	-	1	-	-	-	-	-	-	-	-	-	-	1	-
7.17	511-122-00	Screw	-	-	1	-	-	-	-	-	-	-	-	-	-	1	-
7.18	320-028-00	Ferrite Cable Core	-	-	2	-	-	-	-	-	-	-	-	-	-	-	-
7.19	420-088-00	Wire, 18 ga.	-	-	AR	-	-	-	-	-	-	-	AR	-	-	-	-
7.20	510-943-00	Helicoil	-	-	-	-	-	-	-	4	-	-	-	4	-	-	-
7.21	510-815-00	Screw	-	-	-	-	-	-	-	4	-	-	-	4	-	-	-
7.22	400-051-00	Switch	-	-	-	-	-	-	-	1	-	-	-	-	-	-	-
7.23	450-154-00	Shrink Boot	-	-	-	-	-	1	1	-	-	-	1	-	-	-	-
7.24	512-036-00	Band Clamp	-	-	-	-	-	1	1	-	-	-	1	-	-	-	-
8	290-643-00	Armor Plate, Solenoid Side	1	1	1	-	1	1	1	1	1	1	1	1	1	-	-
8	291-862-00	Armor Plate, Solenoid	-	-	-	1	-	-	-	-	-	-	-	-	-	-	-

Item	Part No.	Description	528-028-00	528-028-01	528-028-02	528-028-03	528-028-04	528-028-05	528-028-06	528-028-11	528-028-55	528-028-57	528-028-58	528-028-65	528-028-69	Overhaul Kit 212-020-00	Overhaul Kit 212-071-00
		Side															
9	290-644-00	Armor Plate, Manual Release Side	1	1	1	-	1	1	1	1	1	1	1	1	1	-	-
9	291-863-00	Armor Plate, Manual Release Side	-	-	-	1	-	-	-	-	-	-	-	-	-	-	-
10	290-868-00	Manual Release Cover	1	1	1	1	-	1	1	1	1	-	-		1	-	-
10	291-916-00	Manual Release Cover	-	-	-	-	1	-	-	-	-	1	1	1	-	-	-
11	290-896-00	Cam Roller Pin	1	1	1	1	1	1	1	1	1	1	1	1	1	-	-
12	290-900-00	Toggle Pivot Bolt	1	1	1	1	1	-	-	1	1	1	-	-	1	1	-
12	290-900-01	Toggle Pivot Bolt	-	-	-	-	1	-	-	-	-	-	-	-	-	-	-
12	509-002-00	QSF Toggle Pivot Bolt	-	-	-	-	-	1	1	-	-	-	1	1	-	-	1
13	290-901-00	Cam Pivot Bolt	1	1	1	1	-	-	-	1	1	1	-	-	1	1	-
13	290-901-01	Cam Pivot Bolt	-	-	-	-	1	-	-	-	-	-	-	-	-	-	-
13	509-003-00	QSF Cam Pivot Bolt	-	-	-	-	-	1	1	-	-	-	1	1	-	-	1
14	510-082-00	Nut	1	1	1	1	1	1	1	1	1	1	1	1	1	1	1
15	510-095-00	Washer	1	1	1	1	1	1	1	1	1	1	1	1	1	1	1
16	510-100-00	Washer	1	1	1	2	2	1	1	1	1	2	1	1	1	1	1
17	510-102-00	Nut	2	2	2	2	2	2	2	2	2	2	2	2	2	2	2
18	510-115-00	Cotter Pin	1	1	1	1	1	1	1	1	1	1	1	1	1	1	1
19	510-125-00	Cotter Pin	1	1	1	1	1	1	1	1	1	1	1	1	1	1	1
20	510-259-00	Nut	1	1	1	1	1	-	-	1	1	1	-	-	1	1	-
20	510-796-00	Nut	-	-	-	-	-	1	1	-	-	-	1	1	-	-	1
21	510-375-00	Bolt	1	1	1	1	1	1	1	1	1	1	1	1	1	1	1
22	510-376-00	Bolt	1	1	1	1	1	1	1	1	1	1	1	1	1	1	1

Item	Part No.	Description	528-028-00	528-028-01	528-028-02	528-028-03	528-028-04	528-028-05	528-028-06	528-028-11	528-028-55	528-028-57	528-028-58	528-028-65	528-028-69	Overhaul Kit 212-020-00	Overhaul Kit 212-071-00
23	510-493-00	Screw	2	2	2	2	2	2	2	2	2	2	2	2	2	2	2
24	510-516-00	Washer	1	1	1	1	1	1	1	1	1	1	1	1	1	1	1
25	510-391-00	Screw	-	-	-	-	-	-	-	-	1	-	-	-	-	-	-
26	514-031-00	Bumper	1	1	1	1	1	1	1	1	1	1	1	1	1	1	1
27	514-058-00	Torsion Spring	2	2	2	2	2	2	2	2	2	2	2	2	2	2	2
28[6]	215-260-00	Overhaul Label	-	-	-	-	-	-	-	-	-	-	-	-	-	1	1
29	514-123-00	Torsion Spring – Continuity	-	-	-	-	1	-	-	-	-	1	1	1	-	-	-
30	510-003-00	Screw	-	-	-	-	2	-	-	-	-	2	2	2	-	-	-
31	292-094-00	Switch Actuator	-	-	-	-	-	-	-	1	-	-	-	-	-	-	-
32	510-266-00	Screw	-	-	-	-	-	-	-	2	-	-	-	-	-	-	-
33	292-021-00	Bumper	-	-	-	1	-	-	-	-	-	-	-	-	-	-	-
34	510-977-00	Bolt	-	-	-	1	-	-	-	-	-	-	-	-	-	1	-
35	510-114-00	Nut	-	-	-	1	-	-	-	-	-	-	-	-	-	1	-
36	220-052-00	Attach Point Bumper	-	-	-	-	-	1	1	-	-	-	-	-	-	-	-

[1] Item not illustrated as an assembly.

[2] P/N 232-182-01 supersedes P/N 232-182-00, these parts are interchangeable.

[3] Diode P/N 340-035-00 supersedes diode P/N 340-027-00.

[4] These items are not shown, they are for securing diode P/N 340-027-00 to Solenoid Cover.

[5] Under STCs which Surefire Release has been approved (refer to applicable kit Owner's Manual), Cargo Hook P/N 528-028-00 can be converted to P/N 528-028-02 (with Surefire Release) with installation of Upgrade Kit P/N 200-443-00 (includes Solenoid Assembly P/N 232-186-02). Refer to the instructions below.

- Stamp, engrave or otherwise permanently mark the MFG DATE and S/N of the cargo hook being modified on the Serial Plate of the Solenoid Assembly (P/N 232-186-02) provided with the Upgrade Kit.
- Remove cotter pin (18), nuts (17 and 20) and washers (15 and 16) from cargo hook.
- Remove bolts (12 and 21) and Solenoid Assembly (7).
- Position the Solenoid Assembly (w/Surefire) on the cargo hook side plate and insert the bolts (12 and 21) through.
- Place the washers (15 and 16) over the ends of the bolts. Thread the supplied self-locking nut (17) and the castellated nut (20, re-use the nut removed) over the bolts. Refer to sections 10.28 and 10.29 for tightening instructions.
- Install the supplied cotter pin (18) at the castellated nut.
- Perform a check of the electrical release function per section 11.9.
- A Cockpit Decal (P/N 215-343-00) is also provided with the kit and must be installed in a location near the Cargo Release button in the cockpit. Refer to applicable kit Owner's Manual.

[6] Item not shown.

14.0 Instructions for Returning Equipment to the Factory

14.1 If an Onboard Systems product must be returned to the factory for any reason (including returns, service, repairs, overhaul, etc.) obtain an RMA number before shipping your return.

NOTICE

An RMA number is required for all equipment returns.

- To obtain an RMA, please use one of the listed methods.
    - Contact Technical Support by phone or e-mail: (Techhelp@OnboardSystems.com).
    - Generate an RMA number at our website: http://www.onboardsystems.com/rma.php
- After you have obtained the RMA number, please be sure to:
    - Package the component carefully to ensure safe transit.
    - Write the RMA number on the outside of the box or on the mailing label.
    - Include the RMA number and reason for the return on your purchase or work order.
    - Include your name, address, phone, and email (as applicable).
    - Return the components freight, cartage, insurance and customs prepaid to:

      Onboard Systems International, LLC
      13915 NW 3rd Court
      Vancouver, Washington 98685
      USA
      Phone: 360-546-3072