Owner's Manual
Dual Cargo Hook System
for the
Bell 429

Onboard Systems International, LLC
13915 NW 3rd Court
Vancouver, WA 98685 United States of America
Cage Code: 1Y921
Toll Free Phone: (800) 275-0883
Phone: (360) 546-3072

Applicable Equipment Part Numbers

200-483-XX
200-490-XX
200-492-XX
200-493-XX
200-494-XX

Please check our web site www.onboardsystems.com
for the latest revision of this manual.

This document is proprietary to Onboard Systems Int'l. Disclosure or reproduction is not allowed. © 2025 Onboard Systems Int'l., all rights reserved.

RECORD OF REVISIONS

Revision	Date	Page(s)	Reason for Revision
0	04/25/23	All	Initial Release
1	11/03/23	All	Incorporated installation instructions for fixed provisions kits.
2	04/08/24	All	Updated per prototype installation.
3	12/17/24	113 117, 118, 122 136	Added note regarding alternate ¼ turn fastener for fairing installation. Updated instructions for reservoir lid disassembly and re-assembly. Added details for recommended Frame Support.
4	03/28/25	All	Clarifications made throughout. Corrected termination of wires HEC021C22 and HEC-007P22 at 3930A5P2 in Figure 12.1 wiring schematic.

Register Your Products for Automatic Notifications

Onboard Systems offers a free notification service via fax or email for product alerts and documentation updates. By registering your Onboard Systems products at our website, we will be able to contact you if a service bulletin is issued, or if the documentation is updated.

You can choose to receive notices on an immediate, weekly, or monthly schedule via fax, email or both methods. There is no charge for this service. Please visit our website at www.onboardsystems.com/notify.php to get started.

This document is proprietary to Onboard Systems Int'l. Disclosure or reproduction is not allowed. © 2025 Onboard Systems Int'l., all rights reserved.

CONTENTS

1.0 Introduction 5
1.1 Scope 5
1.2 Capability 5
1.3 Safety labels 5
2.0 System Overview 6
2.1 Introduction 6
2.2 Specifications 9
2.3 Bill of Materials – 429 Dual Cargo Hook System 10
2.4 Bill of Materials – Long Line Kit 21
3.0 Fixed Provisions Installation 22
3.1 Bell Parts Installation 22
3.1.1 Drain Tubes Installation 22
3.1.2 Collective Stick and Collective Boot Installation 22
3.2 Hardpoint Installation 23
3.3 Miscellaneous Fixed Provisions Supporting Parts 32
3.3.1 Connector Bracket Assembly Installation 32
3.3.2 Ground Plate Installation 35
3.3.3 Relay Module Assembly Standoffs 37
3.3.4 Fairing Assembly Supports 39
3.3.5 Modifications to Support Hose & Wire Harness Routing 46
3.3.6 Create Holes for Routing Hoses and Harnesses 54
3.4 Fixed Hydraulic Release System Installation 56
3.4.1 Installation at Collective 64
3.5 Fixed Cargo Release Electrical Wiring Installation 67
3.6 Connector Modification Procedure 67
3.7 Cargo Release Electrical Wiring Installation 68
3.7.1 Wire from 3140A1P1 to 4296P22 68
3.7.2 Wire from 4296J22 to 4296P8 69
3.7.3 Harness P/Ns 270-247-00, 270-248-00 and Wires to 4296P8 70
3.7.4 Wires from 3930A5P2 76
3.7.5 Center Relay Panel Wiring 79
3.7.6 Relay Module Assembly P/N 232-885-00 82
3.7.7 Nose Compartment Wiring 85
3.7.8 Cargo Hook Arming Relay Kit P/N 270-255-00 87
3.7.9 Arming Switch Kit P/N 210-334-00 91
3.7.10 Wires to CARGO Hook CBs 93
3.7.11 Wires to HEC Hook CB 96
4.0 Load Weigh System Fixed Electrical Installation 98
4.1 C-40 Indicator Installation 98
4.2 Load Weigh Internal Harness Installation 101
4.2.1 Harness Installation (P/N 270-310-00) from C-40 102
4.2.2 LH Harness Installation – 4296P13 to 4296J34 107
4.2.3 RH Harness Installation – LOAD CELL to 4296P8 108

This document is proprietary to Onboard Systems Int'l. Disclosure or reproduction is not allowed. © 2025 Onboard Systems Int'l., all rights reserved.

4.2.4 LH Harness Installation – LOAD CELL to 4296P34 109
5.0 Removable Provisions Installation 111
5.1 Cargo Hook/Frame Assembly Installation 111
5.2 Fairing Assembly Installation.....113
5.3 Placard Installation.....113
6.0 Load Weigh Upgrade Kit Installation 114
6.1 Pin Load Cell Installation.....114
7.0 Hydraulic System Fill and Bleed Procedure 117
8.0 Long Line Kit 123
8.1.1 Rigging Plate 124
9.0 Installation Check-out 126
9.1 Functional Check 126
9.2 Component Weights 129
9.3 Paperwork.....131
10.0 Maintenance.....132
11.0 Instructions for Returning Equipment to the Factory 132
12.0 Cargo Release Electrical Schematic 133
13.0 Frame Support.....136

This document is proprietary to Onboard Systems Int'l. Disclosure or reproduction is not allowed. © 2025 Onboard Systems Int'l., all rights reserved.

1.0 Introduction

1.1 Scope

This Owner's Manual contains instructions for installation of the Dual Cargo Hook System on Bell 429 aircraft.

1.2 Capability

The instructions contained in this document are provided for the benefit of experienced aircraft maintenance personnel and facilities that are capable of carrying out the procedures.

1.3 Safety labels

The following definitions apply to safety labels used in this manual.

DANGER	Indicates a hazardous situation which, if not avoided, will result in death or serious injury.
WARNING	Indicates a hazardous situation which, if not avoided, could result in death or serious injury.
CAUTION	Indicates a hazardous situation which, if not avoided, could result in minor or moderate injury.
NOTICE	Draws the reader's attention to important or unusual information not directly related to safety.
CAUTION	Used to address practices not related to personal injury.

This document is proprietary to Onboard Systems Int'l. Disclosure or reproduction is not allowed. © 2025 Onboard Systems Int'l., all rights reserved.

2.0 System Overview

2.1 Introduction

The Dual Cargo Hook System is approved for carrying of Human External Cargo (HEC) on the Bell 429 model helicopters.

The Dual Cargo Hook System includes:

1. A Frame Assembly which supports a primary cargo hook (also referred to as Cargo Hook) and a secondary cargo hook (also referred to as HEC Hook) to which a supplied Y-rope is connected to for carrying of HEC. These cargo hooks are Onboard Systems 528-028 series of cargo hooks with hydraulic release. The cargo hooks are mounted to a structural Frame Assembly that attaches to four Lug Assemblies attached to the belly of the helicopter (two at STA 212.99 and two at 233.24). The Frame Assembly, Lug Assemblies and internal Keel Beam Fittings are provided. Retrofit kits are available (see section 2.3) for installation on an aircraft with an existing type certificate approved cargo hook installation.

Figure 2.1 Dual Cargo Hook System Overview

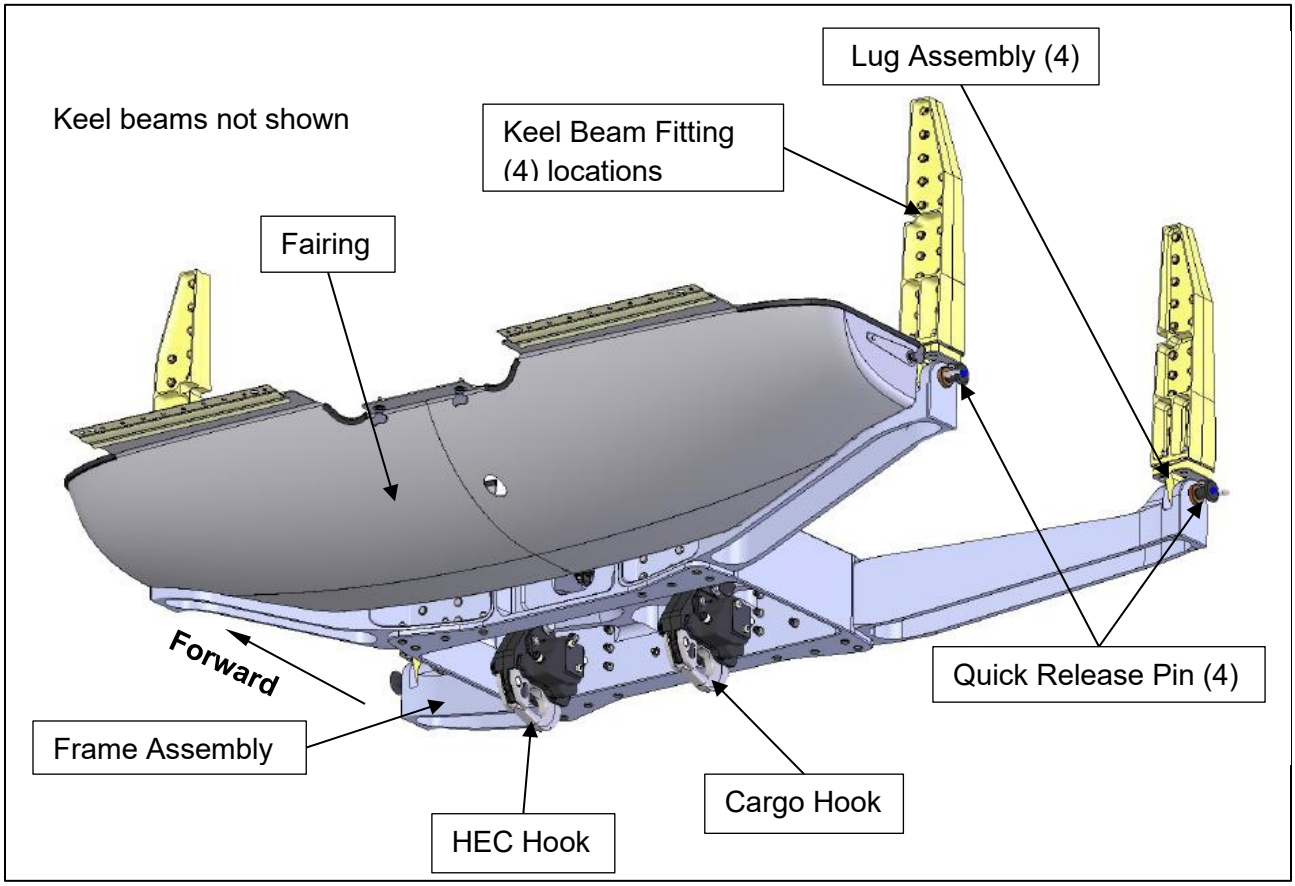

This document is proprietary to Onboard Systems Int'l. Disclosure or reproduction is not allowed. © 2025 Onboard Systems Int'l., all rights reserved.

2. Backup quick release sub-systems (BQRS) for the primary Cargo Hook and secondary HEC Hook. These systems are independently actuated by a Dual Master Cylinder Assembly installed on the collective (reference Figure 2.2). The assembly features a lockout lever and sequential release for increased safety during HEC operation with the system in HEC mode. The sequential release feature prevents both levers from being pulled simultaneously. To release an external load attached to both cargo hooks: (1) push the lockout lever down, (2) pull the HEC Hook Release lever (this action unlocks the Cargo Hook Release lever) (3) pull the Cargo Hook Release lever (or pull both levers simultaneously). In NHEC mode, pushing the Lockout Lever down unlocks both levers.

Figure 2.2 Dual Master Cylinder Assembly Overview

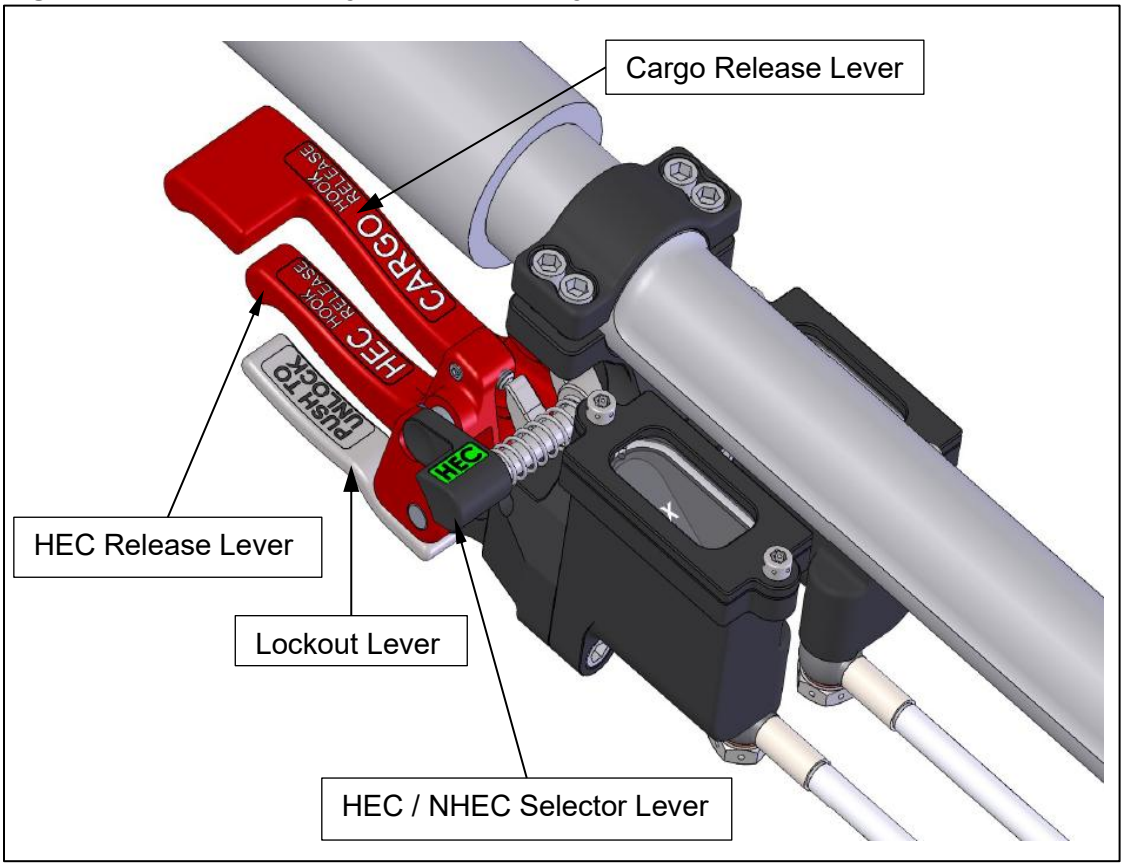

3. Complete primary quick release sub-systems (PQRS) for the secondary (HEC) cargo hook and the primary cargo hook with the exception of the push-button switches on the cyclic and collective. This installation requires that the Bell TC push-button switches be present (wire harnesses are provided to interface with connectors at the base of the controls).

This document is proprietary to Onboard Systems Int'l. Disclosure or reproduction is not allowed. © 2025 Onboard Systems Int'l., all rights reserved.

4. A Fairing (reference Figure 2.1) which is located forward of the Dual Cargo Hook Frame, and provides an aerodynamic transition between the aircraft and the Dual Cargo Hook Frame. The Fairing is easily removable via four quarter-turn fasteners, one on its left-hand side and one on its right-hand side and two at its forward center flange.
5. Y-rope. The Y-rope is required as it provides a controlled interface between the two cargo hooks and the long line.
6. An optional Long Line Assembly designed to interface with the Y-rope through carabiners included in the long line kit P/N 200-490 series. This long line kit also includes a Lanyard Assembly to connect to a personnel harness.

This document is proprietary to Onboard Systems Int'l. Disclosure or reproduction is not allowed. © 2025 Onboard Systems Int'l., all rights reserved.

2.2 Specifications

Table 2.1 P/N 232-892-00 Frame Assembly Specifications

Rated Load (NHEC)**	3,000 lb (1360 kg)
Rated Load (HEC)	1,322 lb (600 kg)
Design Ultimate Strength	11,250 lbs (4,508 kg)

*Use of the HEC cargo hook is limited to dual cargo hook (HEC) operations with the slack line of the Y-rope attached to it. Do NOT exceed the rated load of 1322 lb. with this configuration.

Table 2.2 Cargo Hook Specifications

Rated load (P/N 528-028-05)	3,500 lbs. (1,580 kg)
Rated load (P/N 528-028-06)	1,322 lbs. (600 kg)**
Design ultimate strength	13,125 lbs. (5,953 kg)
Electrical release capacity	8,750 lbs. (3,970 kg)
Mechanical release capacity	8,750 lbs. (3,970 kg)
Force required for mechanical release at 3,000 lbs.	15 lbs max. @ Master Cylinder
Electrical requirements	22-32 VDC 6.9 – 10 amps
Minimum release load	0 lbs.
Unit weight	3.0 lbs. (1.35 kg.)
Electrical connector (528-028-05)	D38999/26WD97PA
Electrical connector (528-028-06)	D38999/26WD97PN

** Cargo Hook P/N 528-028-06 is the HEC (RH position) cargo hook and is dedicated to HEC operations thus is limited to 1322 lbs. (600 kg).

⚠ CAUTION

Load ratings given are specific to the equipment described only. Loading limits for the helicopter still apply. Consult the basic flight manual issued by the TC holder and the flight manual supplement provided with the dual cargo hook system for limits.

This document is proprietary to Onboard Systems Int'l. Disclosure or reproduction is not allowed. © 2025 Onboard Systems Int'l., all rights reserved.

2.3 Bill of Materials – 429 Dual Cargo Hook System

This section contains the parts breakdowns for the various kit options for the Dual Cargo Hook System. These kits provide options for removable and fixed provisions in combinations of LH PIC and RH PIC and with or without a load weigh system.

Table 2.3 Top Level Kit Configurations

Kit P/N	Description
200-483-00	For LH PIC, with Load Weigh System
200-483-01	For RH PIC, with Load Weigh System
200-483-02	For LH PIC, without Load Weigh System
200-483-03	For RH PIC, without Load Weigh System

Table 2.4 Bill of Materials – Dual Cargo Hook System P/N 200-483-XX

Part No.	Description	Qty			
		-00	-01	-02	-03
200-485-00	Fixed Provisions, LH PIC w/ Load Weigh	1	-	-	-
200-485-01	Fixed Provisions, RH PIC w/ Load Weigh	-	1	-	-
200-485-02	Fixed Provisions, LH PIC w/o Load Weigh	-	-	1	-
200-485-03	Fixed Provisions, RH PIC w/o Load Weigh	-	-	-	1
200-486-00	Removable Provisions w/ Load Weigh	1	1	-	-
200-486-01	Removable Provisions w/o Load Weigh	-	-	1	1

The Dual Cargo Hook System does not include the push-button switch on the cyclic, this is typically found to be installed at the factory on all Bell 429s but this should be verified. In addition, the following Bell parts are NOT supplied with the Dual Cargo Hook System and must be purchased if they are not present. Verify their status on the aircraft before purchasing.

Table 2.5 Required Bell Parts

Aircraft S/N Range	Parts Required to be Purchased from Bell
57001 through 57279	P/N 429-301-003-127 – Collective Stick* P/N 429-001-151-129 – Collective Boot P/N 429-706-081-103 – Drain Tube Assembly P/N 429-706-009-107 – Drain Tube Assembly
57280 and Subsequent	P/N 429-001-151-129 – Collective Boot P/N 429-706-081-103 – Drain Tube Assembly P/N 429-706-009-107 – Drain Tube Assembly

*HEC Hook Release switch must be present.

This document is proprietary to Onboard Systems Int'l. Disclosure or reproduction is not allowed. © 2025 Onboard Systems Int'l., all rights reserved.

The P/N 200-485 series fixed provisions kits are listed in Table 2.6 and the parts included in each of these kits are listed in Table 2.7. These kits include the Dual Master Cylinder which includes the backup release provisions for both the primary Cargo Hook and the secondary HEC Hook.

Table 2.6 Fixed Provisions Kit Configurations

Kit P/N	Description
200-485-00	Fixed Provisions Kit with Load Weigh System, LH PIC
200-485-01	Fixed Provisions Kit with Load Weigh System, RH PIC
200-485-02	Fixed Provisions Kit without Load Weigh System, LH PIC
200-485-03	Fixed Provisions Kit without Load Weigh System, RH PIC

The bill of materials for each of these kits is listed in the table below.

Table 2.7 Bill of Materials – 200-485-XX Fixed Provisions Kits

Part No. (P/N)	Description	Qty			
		-00	-01	-02	-03
210-293-01	C-40 Indicator	1	1	-	-
210-333-00	Cargo Release Wiring Kit	1	1	1	1
210-334-00	Arming Switch Kit	1	1	1	1
215-417-00	Load Weigh Breaker Decal	1	1	-	-
215-456-00	External Load Placard	1	1	1	1
215-471-00	Harness Label Kit	1	1	1	1
215-472-00	HEC Hook Breaker Decal	1	1	1	1
232-876-00	Dual Master Cylinder Assembly w/ Plumbing, LH	1	-	1	-
232-876-01	Dual Master Cylinder Assembly w/ Plumbing, RH	-	1	-	1
232-885-00	Relay Module	1	1	1	1
232-886-00	Lug Assembly, FWD	2	2	2	2
232-887-00	Lug Assembly, LA	1	1	1	1
232-888-00	Lug Assembly, RA	1	1	1	1
232-896-00	Connector Bracket Assembly	1	1	1	1
232-916-00	Connector Bracket Fairing Assembly	1	1	1	1
235-313-00	Ground Plate	1	1	1	1
235-315-00	Retainer, Left	1	1	1	1
235-316-00	Fairing Bracket, Left	1	1	1	1
235-316-01	Fairing Bracket, Right	1	1	1	1
235-317-00	Laminated Aluminum Shim	4	4	4	4
235-323-00	Retainer, Right	1	1	1	1
270-247-00	Cargo Hook Internal Harness, Primary	1	1	1	1
270-248-00	Cargo Hook Internal Harness, Secondary (HEC)	1	1	1	1
270-255-00	Cargo Hook Arming Relay Harness	1	1	1	1

This document is proprietary to Onboard Systems Int'l. Disclosure or reproduction is not allowed. © 2025 Onboard Systems Int'l., all rights reserved.

Part No. (P/N)	Description	Qty			
		-00	-01	-02	-03
270-310-00	Load Weigh Internal Harness, C-40 End	1	1	-	-
270-311-00	Load Weigh Internal Wiring Kit, Intermediate	1	-	-	-
270-312-00	Load Weigh Internal Harness, Load Cell End	1	1	-	-
292-145-00	Keel Beam Fitting, LF, Front	1	1	1	1
292-146-00	Keel Beam Fitting, LF, Rear	1	1	1	1
292-147-00	Keel Beam Fitting, RF, Front	1	1	1	1
292-148-00	Keel Beam Fitting, RF, Rear	1	1	1	1
292-149-00	Keel Beam Fitting, LA, Front	1	1	1	1
292-150-00	Keel Beam Fitting, LA, Rear	1	1	1	1
292-151-00	Keel Beam Fitting, RF, Front	1	1	1	1
292-152-00	Keel Beam Fitting, RF, Rear	1	1	1	1
292-156-00	Composite Shim	8	8	8	8
292-157-00	Composite Shim	8	8	8	8
292-183-00	C-40 Indicator Bracket, LH	1	-	-	-
292-183-01	C-40 Indicator Bracket, RH	-	1	-	-
440-022-00	Circuit Breaker, 2 Amp	1	1	-	-
500-062-00	Standoff	1	1	1	1
500-527-00	Standoff, Riveted	4	4	4	4
500-528-00	Standoff, Riveted	1	1	1	1
500-529-00	Standoff, Adhesive (Narrow)	1	-	1	-
500-530-00	Standoff, Riveted	2	1	2	1
500-531-00	Standoff, Adhesive	2	2	2	2
500-532-00	Standoff, Adhesive (Narrow)	2	2	2	2
500-533-00	Standoff, Adhesive	5	4	5	4
500-535-00	Cable Tie Mount	1	-	1	-
505-028-00	Grommet	2	2	2	2
505-029-00	Oval Grommet	1	1	1	1
510-282-00	Rivet, Solid	4	4	4	4
510-390-00	Screw	1	1	1	1
510-419-00	Washer	33	30	33	30
510-456-00	Bolt, #10	76	76	76	76
510-477-00	Screw	1	1	1	1
510-478-00	Nut, Self-locking, #10	78	78	78	78
510-633-00	Screw	4	4	4	4
510-644-00	Screw	12	9	12	9
510-700-00	Screw, C'Sink, 4-40	12	12	8	8
510-785-00	Washer	16	16	16	16

This document is proprietary to Onboard Systems Int'l. Disclosure or reproduction is not allowed. © 2025 Onboard Systems Int'l., all rights reserved.

Part No. (P/N)	Description	Qty			
		-00	-01	-02	-03
510-816-00	Screw	2	2	-	-
510-910-00	Washer, #10	152	152	152	152
511-023-00	Nut	2	2	-	-
511-024-00	Washer	2	2	-	-
511-198-00	Rivet, Solid	2	2	2	2
511-214-00	Perimeter Nut Plate	1	1	-	-
511-223-00	Screw	4	4	-	-
511-269-00	Perimeter Nut Plate	2	2	2	2
511-256-00	Quarter Turn Receptacle	4	4	4	4
511-272-00	Bolt, Spline Drive, #10	16	16	16	16
511-273-00	Nut, Spline Drive, #10	16	16	16	16
511-274-00	Screw	4	4	4	4
511-275-00	Rivet, Solid	12	10	12	10
511-277-00	Rivet, Blind	1	1	1	1
511-278-00	Rivet, Solid	4	4	4	4
511-280-00	Rivet, Blind	4	4	4	4
511-281-00	Rivet, Blind	4	4	4	4
511-282-00	Rivet, Blind	4	4	4	4
512-003-00	Cable Tie	30	30	30	30
512-010-00	Cushioned Loop Clamp	1	1	1	1
512-011-00	Cable Tie	20	20	20	20
512-024-00	Cushioned Loop Clamp	1	1	1	1
512-028-00	Bracket	1	1	1	1
512-069-00	Loop Clamp	1	1	1	1
512-070-00	Cushioned Loop Clamp, -5	20	14	20	14
512-072-00	Cable Support	1	1	1	1
512-074-00	Cushioned Loop Clamp, -14	1	1	-	-
512-076-00	Loop Clamp	2	2	2	2
520-144-00	Leading Edge Tape	12"	12"	12"	12"
Tools/Installation Aids					
139-216-00	Fairing Bracket Installation Aid	1	1	1	1
212-014-02	Hydraulic Bleed Kit	1	1	1	1
235-332-00	Installation Shim	8	8	8	8
520-147-00	Adhesive Kit	4	4	4	4

This document is proprietary to Onboard Systems Int'l. Disclosure or reproduction is not allowed. © 2025 Onboard Systems Int'l., all rights reserved.

The parts included with the P/N 200-486-00 and 200-486-01 Removable Provisions are listed below. These Removable Provisions kits are the same except 200-486-01 does not include a load cell (for the load weigh system).

Table 2.8 Bill of Materials – P/N 200-486-00, 200-486-01

Part No.	Description	Qty	
		-00	-01
232-892-00	Frame Assembly with Cargo Hooks and Load Cell	1	-
232-892-01	Frame Assembly with Cargo Hooks w/o Load Cell	-	1
232-894-00	Fairing Assembly	1	1

Frame Support 139-213-00 in conjunction with a floor jack is recommended tooling for assisting in installation of the Lug Assemblies on the belly of the helicopter. It also can be used to position the frame prior to inserting the quick release pins. Recommended frame support design and fabrication drawing is included in Section 13.0.

Figure 2.3 Frame Support 139-213-00

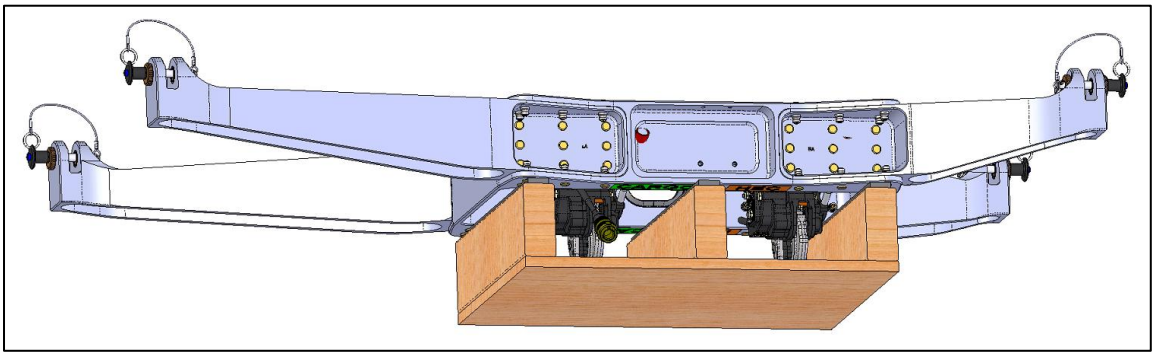

The following materials/consumables required for the installation that are not included with the cargo hook kits are listed in Table.

Part No./Specification	Description
MIL-PRF-81733 (Bell material code C-251)	Sealant
CA1000 (Bell code C-586)	Corrosion Preventive Compound
MIL-I-46852 or Bell P/N 299-947-110, Type III, Class 2	Self-Fusing Electrical Tape Adhesive Tape
MIL-PRF-23377 (Bell code C-204)	Epoxy Polyamide Primer

This document is proprietary to Onboard Systems Int'l. Disclosure or reproduction is not allowed. © 2025 Onboard Systems Int'l., all rights reserved.

The parts included with the optional P/N 200-492-00 and P/N 200-492-01 Load Weigh Upgrade Kits are listed below. These kits are identical except for the mounting bracket for the C-40 Indicator, -00 kit includes a mount for the right-hand door post (for RH PIC) and -01 includes a mount for the left-hand door post.

Table 2.9 Bill of Materials – P/N 200-492-00 & 200-492-01

Part No.	Description	Qty	
		-00 (LH)	-01 (RH)
210-293-01	C-40 Load Weigh Indicator	1	1
210-327-00	Pin Load Cell Assembly	1	1
215-417-00	Load Weigh Breaker Placard	1	1
270-310-00	Load Weigh Internal Harness, C-40	1	1
270-311-00	Load Weigh Internal Harness, Intermediate	1	-
270-312-00	Load Weigh Internal Harness, LC End	1	1
292-183-00	C-40 Mount Bracket, LH	1	-
292-183-01	C-40 Mount Bracket, RH	-	1
440-022-00	Circuit Breaker, 2A	1	1
510-178-00	Cotter Pin	1	1
510-497-00	Washer	1	1
510-700-00	Screw	4	4
510-780-00	Nut	1	1
510-816-00	Screw	2	2
510-870-00	Washer	1	1
511-023-00	Nut	2	2
511-024-00	Washer	2	2
511-214-00	Perimeter Nut Plate	1	1
511-223-00	Screw	4	4
512-011-00	Cable Tie	10	10
512-074-00	Cushioned Loop Clamp	1	1

This document is proprietary to Onboard Systems Int'l. Disclosure or reproduction is not allowed. © 2025 Onboard Systems Int'l., all rights reserved.

The Onboard Systems removable provisions kit is compatible with most of Bell dual cargo hook system fixed provisions with the exception being the cargo hooks' cable release systems must be replaced with hydraulic release systems. Thus, the following fixed provisions kits provide an "upgrade" to modify the Bell fixed provisions to accommodate the Onboard Systems removable provisions kit. The Bell internal electrical harnesses are compatible with the Onboard Systems cargo hooks.

The 200-493 series kits are Fixed Provisions Retrofit Kits for modifying the Bell dual cargo hook system fixed provisions to accommodate the Onboard Systems removable provisions. These kits are defined below.

The retrofit kits provide options for fixed provisions in combinations of LH PIC and RH PIC and with or without a load weigh system.

Table 2.10 Dual Hook Fixed Provisions Retrofit Kit Descriptions

Retrofit Kit P/N	Description
200-493-00	For LH PIC, with Load Weigh System
200-493-01	For RH PIC, with Load Weigh System
200-493-02	For LH PIC, without Load Weigh System
200-493-03	For RH PIC, without Load Weigh System

Table 2.11 Bill of Materials – 200-493 Dual Hook Fixed Provisions Retrofit Kits

Part No. (P/N)	Description	Qty			
		-00	-01	-02	-03
210-293-01	C-40 Indicator	1	1	-	-
215-417-00	Load Weigh Breaker Decal	1	1	-	-
215-456-00	External Load Placard	1	1	1	1
232-876-00	Dual Master Cylinder Assembly w/ Plumbing, LH	1	-	1	-
232-876-01	Dual Master Cylinder Assembly w/ Plumbing, RH	-	1	-	1
232-896-00	Connector Bracket Assembly	1	1	1	1
232-916-00	Connector Bracket Fairing Assembly	1	1	1	1
235-316-00	Fairing Bracket, Left	1	1	1	1
235-316-01	Fairing Bracket, Right	1	1	1	1
270-310-00	Load Weigh Internal Harness, C-40 End	1	1	-	-
270-311-00	Load Weigh Internal Wiring Kit, Intermediate	1	-	-	-
270-312-00	Load Weigh Internal Harness, Load Cell End	1	1	-	-
292-183-00	C-40 Indicator Bracket, LH	1	-	-	-

This document is proprietary to Onboard Systems Int'l. Disclosure or reproduction is not allowed. © 2025 Onboard Systems Int'l., all rights reserved.

Part No. (P/N)	Description	Qty			
		-00	-01	-02	-03
292-183-01	C-40 Indicator Bracket, RH	-	1	-	-
440-022-00	Circuit Breaker, 2 Amp	1	1	-	-
500-529-00	Standoff, Adhesive (Narrow)	1	-	1	-
500-530-00	Standoff, Riveted	2	1	2	1
500-531-00	Standoff, Adhesive	2	2	2	2
500-532-00	Standoff, Adhesive (Narrow)	2	2	2	2
500-533-00	Standoff, Adhesive	4	3	4	3
500-535-00	Cable Tie Mount	1	-	1	-
505-028-00	Grommet	2	2	2	2
505-029-00	Oval Grommet	1	1	1	1
510-390-00	Screw	1	1	1	1
510-419-00	Washer	15	12	15	12
510-477-00	Screw	1	1	1	1
510-478-00	Nut	2	2	2	2
510-633-00	Screw	4	4	4	4
510-644-00	Screw	8	5	8	5
510-700-00	Screw, C'Sink, 4-40	12	12	8	8
510-816-00	Screw	2	2	-	-
511-023-00	Nut	2	2	-	-
511-024-00	Washer	2	2	-	-
511-214-00	Perimeter Nut Plate	1	1	-	-
511-223-00	Screw	4	4	-	-
511-256-00	Quarter Turn Receptacle	2	2	2	2
511-269-00	Perimeter Nut Plate	2	2	2	2
511-274-00	Screw	4	4	4	4
511-275-00	Rivet, Solid	4	2	4	2
511-278-00	Rivet, Solid	4	4	4	4
511-280-00	Rivet, Blind	4	4	4	4
511-281-00	Rivet, Blind	4	4	4	4
512-011-00	Cable Tie	20	20	20	20
512-069-00	Loop Clamp	1	1	1	1
512-070-00	Cushioned Loop Clamp, -5	20	14	20	14
512-074-00	Cushioned Loop Clamp, -14	1	1	-	-
512-076-00	Loop Clamp	2	2	2	2
Tools/Installation Aids					
139-216-00	Fairing Bracket Installation Aid	1	1	1	1
212-014-02	Hydraulic Bleed Kit	1	1	1	1
520-147-00	Adhesive Kit	4	4	4	4

This document is proprietary to Onboard Systems Int'l. Disclosure or reproduction is not allowed. © 2025 Onboard Systems Int'l., all rights reserved.

The Onboard Systems removable provisions kit is compatible with the Bell single cargo hook system fixed provision's structural components. Other components of the Bell fixed provisions including the wiring and hydraulic release are not compatible, thus fixed provisions kits (200-494 series) provide an "upgrade" to modify the Bell fixed provisions to accommodate the Onboard Systems removable provisions kit. These kits are defined below.

The retrofit kits provide options for fixed provisions in combinations of LH PIC and RH PIC and with or without a load weigh system.

Table 2.12 Single Hook Fixed Provisions Retrofit Kit Descriptions

Retrofit Kit P/N	Description
200-494-00	For LH PIC, with Load Weigh System
200-494-01	For RH PIC, with Load Weigh System
200-494-02	For LH PIC, without Load Weigh System
200-494-03	For RH PIC, without Load Weigh System

Table 2.13 Bill of Materials – 200-494 Single Hook Fixed Provisions Retrofit Kits

Part No. (P/N)	Description	Qty			
		-00	-01	-02	-03
210-293-01	C-40 Indicator	1	1	-	-
210-333-00	Cargo Release Wiring Kit	1	1	1	1
210-334-00	Arming Switch Kit	1	1	1	1
215-417-00	Load Weigh Breaker Decal	1	1	-	-
215-456-00	External Load Placard	1	1	1	1
215-471-00	Harness Label Kit	1	1	1	1
215-472-00	HEC Hook Breaker Decal	1	1	1	1
232-876-00	Dual Master Cylinder Assembly w/ Plumbing, LH	1	-	1	-
232-876-01	Dual Master Cylinder Assembly w/ Plumbing, RH	-	1	-	1
232-885-00	Relay Module	1	1	1	1
232-896-00	Connector Bracket Assembly	1	1	1	1
232-916-00	Connector Bracket Fairing Assembly	1	1	1	1
235-316-00	Fairing Bracket, Left	1	1	1	1
235-316-01	Fairing Bracket, Right	1	1	1	1
270-247-00	Cargo Hook Internal Harness, Primary	1	1	1	1
270-248-00	Cargo Hook Internal Harness, Secondary (HEC)	1	1	1	1
270-255-00	Cargo Hook Arming Relay Harness	1	1	1	1
270-310-00	Load Weigh Internal Harness, C-40 End	1	1	-	-

This document is proprietary to Onboard Systems Int'l. Disclosure or reproduction is not allowed. © 2025 Onboard Systems Int'l., all rights reserved.

Part No. (P/N)	Description	Qty			
		-00	-01	-02	-03
270-311-00	Load Weigh Internal Wiring Kit, Intermediate	1	-	-	-
270-312-00	Load Weigh Internal Harness, Load Cell End	1	1	-	-
292-183-00	C-40 Indicator Bracket, LH	1	-	-	-
292-183-01	C-40 Indicator Bracket, RH	-	1	-	-
440-022-00	Circuit Breaker, 2 Amp	1	1	-	-
500-062-00	Standoff	1	1	1	1
500-527-00	Standoff, Riveted	4	4	4	4
500-528-00	Standoff, Riveted	1	1	1	1
500-529-00	Standoff, Adhesive (Narrow)	1	-	1	-
500-530-00	Standoff, Riveted	2	1	2	1
500-531-00	Standoff, Adhesive	2	2	2	2
500-532-00	Standoff, Adhesive (Narrow)	2	2	2	2
500-533-00	Standoff, Adhesive	5	4	5	4
500-535-00	Cable Tie Mount	1	-	1	-
505-028-00	Grommet	2	2	2	2
505-029-00	Oval Grommet	1	1	1	1
510-390-00	Screw	1	1	1	1
510-419-00	Washer	17	14	17	14
510-477-00	Screw	1	1	1	1
510-478-00	Nut, Self-locking, #10	2	2	2	2
510-633-00	Screw	4	4	4	4
510-644-00	Screw	12	9	12	9
510-700-00	Screw, C'Sink, 4-40	12	12	8	8
510-816-00	Screw	2	2	-	-
511-023-00	Nut	2	2	-	-
511-024-00	Washer	2	2	-	-
511-198-00	Rivet, Solid	2	2	2	2
511-214-00	Perimeter Nut Plate	1	1	-	-
511-223-00	Screw	4	4	-	-
511-256-00	Quarter Turn Receptacle	2	2	2	2
511-269-00	Perimeter Nut Plate	2	2	2	2
511-272-00	Bolt, Spline Drive, #10	16	16	16	16
511-273-00	Nut, Spline Drive, #10	16	16	16	16
511-274-00	Screw	4	4	4	4
511-275-00	Rivet, Solid	12	10	12	10
511-277-00	Rivet, Blind	1	1	1	1
511-278-00	Rivet, Solid	4	4	4	4
511-280-00	Rivet, Blind	4	4	4	4
511-281-00	Rivet, Blind	4	4	4	4

This document is proprietary to Onboard Systems Int'l. Disclosure or reproduction is not allowed. © 2025 Onboard Systems Int'l., all rights reserved.

Part No. (P/N)	Description	Qty			
		-00	-01	-02	-03
511-282-00	Rivet, Blind	4	4	4	4
512-003-00	Cable Tie	30	30	30	30
512-010-00	Cushioned Loop Clamp	1	1	1	1
512-011-00	Cable Tie	20	20	20	20
512-024-00	Cushioned Loop Clamp	1	1	1	1
512-028-00	Bracket	1	1	1	1
512-069-00	Loop Clamp	1	1	1	1
512-070-00	Cushioned Loop Clamp, -5	20	14	20	14
512-072-00	Cable Support	1	1	1	1
512-074-00	Cushioned Loop Clamp, -14	1	1	-	-
512-076-00	Loop Clamp	2	2	2	2
Tools/Installation Aids					
139-216-00	Fairing Bracket Installation Aid	1	1	1	1
212-014-02	Hydraulic Bleed Kit	1	1	1	1
520-147-00	Adhesive Kit	4	4	4	4

This document is proprietary to Onboard Systems Int'l. Disclosure or reproduction is not allowed. © 2025 Onboard Systems Int'l., all rights reserved.

2.4 Bill of Materials – Long Line Kit

Table 2.14 lists the items included with the Long Line Kit P/N 200-490-XX. This kit provides the required Y-rope and all components, including a lanyard, to connect to a human harness.

NOTICE

The Y-rope is the only mandatory P/N of the Long Line Kit as it interfaces with the cargo hooks. Locally approved alternate components to connect to the Y-rope may be used.

The kit P/N is completed by replacing the XX by a two-digit number which is multiplied by 10 to define the length of the included long line, for example – kit P/N 200-490-10 includes a 100-foot long line (P/N 490-023-10), Kit P/N 200-490-15 includes a 150-foot long line (P/N 490-023-15), etc.

Table 2.14 Bill of Materials – Long Line Kit (P/N 200-490-10 listed)

Part No.	Description	Qty
292-107-00	Rigging Plate	1
490-024-00	Y-Rope	1
490-023-10	Long Line, 100 ft	1
490-017-00	25 LB Long Line Weight Bag	1
490-018-00	Lanyard	1
530-031-00	Carabiner	2

This document is proprietary to Onboard Systems Int'l. Disclosure or reproduction is not allowed. © 2025 Onboard Systems Int'l., all rights reserved.

3.0 Fixed Provisions Installation

These installation instructions are provided for the benefit of experienced aircraft maintenance facilities capable of carrying out the procedures. They must not be attempted by those lacking the necessary expertise.

The installation instructions are separated into sections for Fixed Provisions (this section), Load Weigh System and Removable Provisions and cover a complete installation. If the aircraft is equipped with an existing cargo hook installation, some of these sections are to be skipped as noted.

3.1 Bell Parts Installation

Several parts/assemblies are required to be obtained from Bell to complete the installation. Verify the configuration of the aircraft before proceeding with obtaining these parts.

3.1.1 Drain Tubes Installation

The Drain Tube Assemblies are not provided with the Dual Cargo Hook System.

Install the Bell Drain Tube Assembly P/N 429-706-081-103 at the forward drain position and Drain Tube Assembly P/N 429-706-081-107 at the aft drain position per Bell installation instructions BHT-429-II-52.

3.1.2 Collective Stick and Collective Boot Installation

For Bell 429s with serial numbers 57001 through 57279 verify the collective configuration and install the Bell Collective Stick P/N 429-301-003-127 if needed per Bell installation instructions BHT-429-II-52.

For all serial numbers, install the Collective Boot per Bell installation instructions BHT-429-II-52.

This document is proprietary to Onboard Systems Int'l. Disclosure or reproduction is not allowed. © 2025 Onboard Systems Int'l., all rights reserved.

3.2 Hardpoint Installation

The hardpoint installation (reference Figure 3.1 for overview) includes internal keel beam fittings that are secured to the keel beam and four external fittings (referred to as Lug Assemblies) that are secured to the keel beam fittings through the skin. The Lug Assemblies serve as the direct structural attachments for the Cargo Hook Frame Assembly.

This section is not applicable the installation of a 200-493 series retrofit kit or a 200-494 series retrofit kit.

NOTICE

If installing a 200-493 series or 200-494 series kit for retrofitting a Bell 429 with an existing dual or single cargo hook system respectively, this section is not applicable as the Bell hardpoint installation is compatible.

The following hardware is included in the fixed provisions kit 200-485-XX for the hardpoint installation.

P/N	Description	Qty
510-456-00	Bolt, #10	76
510-478-00	Nut, Self-locking, #10	76
510-419-00	Washer, #10	16
510-785-00	Washer, #10	16
510-910-00	Washer, #10	152
511-321-00	Bolt, Spline Drive, #10	16
511-273-00	Nut, Spline Drive, #10	16

This document is proprietary to Onboard Systems Int'l. Disclosure or reproduction is not allowed. © 2025 Onboard Systems Int'l., all rights reserved.

Figure 3.1 Hardpoint Installation (Left Aft Position Shown)

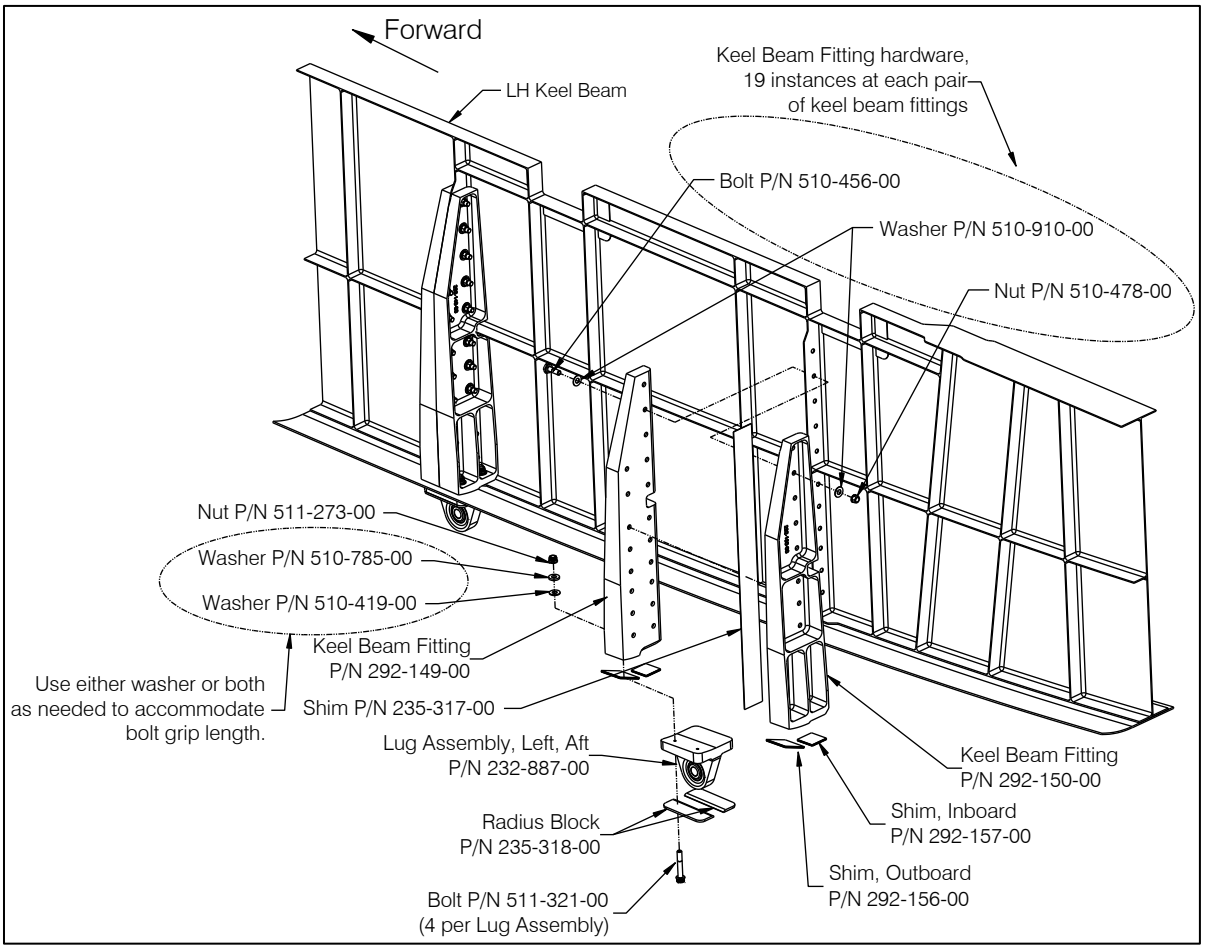

The Keel Beam Fittings are installed on the outside of each keel beam at +BL22.15 and -BL22.15, sandwiching stiffeners on the keel beams at STA 213 and STA 233.

1. Remove the aft access panels on each side of the aircraft to access the keel beams.
2. Remove the existing rivets on each side of the keel beam stiffener at STA 213 and STA 233 and remove the sealant around each hole.

NOTICE

Reference lines are used during installation of the Lug Assemblies.

3. Identify the center line, on both axes, of the holes on the side-body panels. Ensure the lines are perpendicular to the edge of the side-body panels and extend past the Lug Assemblies.

This document is proprietary to Onboard Systems Int'l. Disclosure or reproduction is not allowed. © 2025 Onboard Systems Int'l., all rights reserved.

Figure 3.2 Reference Lines on Belly Example

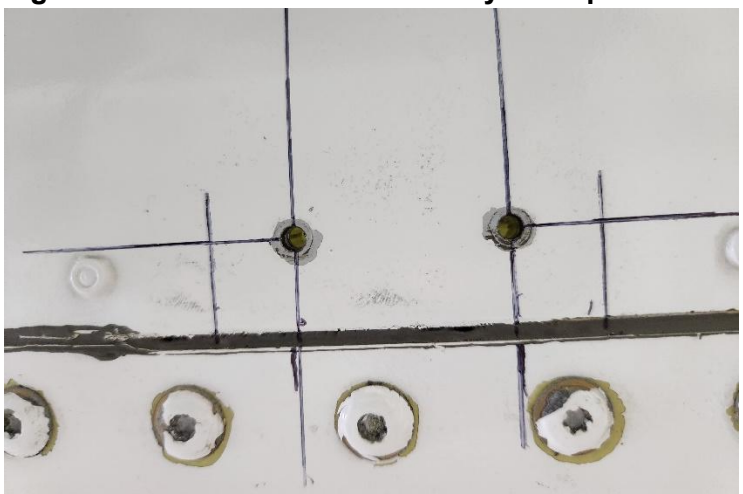

4. Locate the four Lug Assemblies, the part numbers and locations which they are to be installed are as follows.

Part No.	Installation Location
232-886-00	The two forward positions at STA 213 (same Lug Assembly P/N is used at both left and right side). These parts are engraved with "FWD" for identification purposes.
232-887-00	Left side, aft position at STA 233. This part is engraved with "LA" for identification purposes.
232-888-00	Right side, aft position at STA 233. This part is engraved with "RA" for identification purposes.

This document is proprietary to Onboard Systems Int'l. Disclosure or reproduction is not allowed. © 2025 Onboard Systems Int'l., all rights reserved.

5. Drill the four holes in the Lug Assemblies per the following.
    1. Identify the minimum distance requirements for the center of the inboard holes on each Lug Assembly as shown in the figure below.

Figure 3.3 Lug Assembly Min. Edge Distance

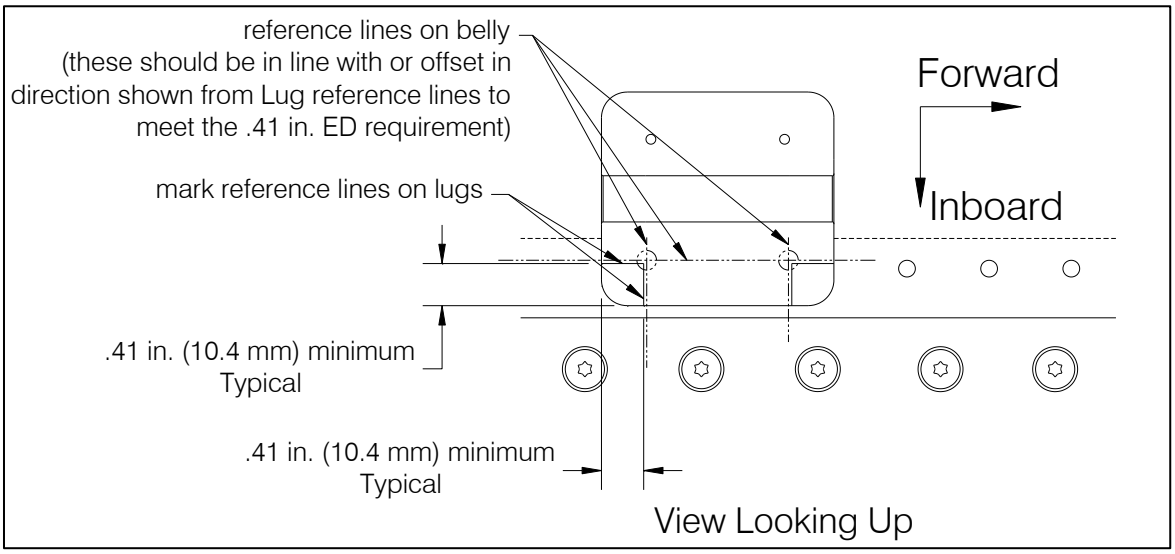

    2. Temporarily position the lug assemblies on the side-body panels with the pre-drilled holes outboard.
    3. Ensure the minimum distance requirements for the center of the inboard holes and the reference lines on the side-body panels are within the limits. If the hole centers do not respect the minimum distance requirements, move the lug assemblies until the requirements are met.
    4. Verify that the Lug Assemblies positions allow them to closely match the side to side contour of the side-body panels and do not rock side to side.
    5. Identify the footprint of the lug assemblies on the side-body panels.

Before drilling it is recommended to use the Frame Support and a floor jack to raise Frame Assembly w/ Lug Assemblies up to the belly to verify the footprint of the Lug Assemblies on the side body panels. Follow steps 6 through 8 for this option, otherwise skip to step 9.

6. Attach the Lug Assemblies to the respective corners of the Frame Assembly.
7. The bushings in the Frame Assembly arms are eccentric, allowing for adjustment/alignment by rotating them. To start, rotate all of these eccentric bushings (2 at each attachment point) so that the scribed line is down.

This document is proprietary to Onboard Systems Int'l. Disclosure or reproduction is not allowed. © 2025 Onboard Systems Int'l., all rights reserved.

Figure 3.4 Eccentric Bushing Orientation (if using Frame Assembly)

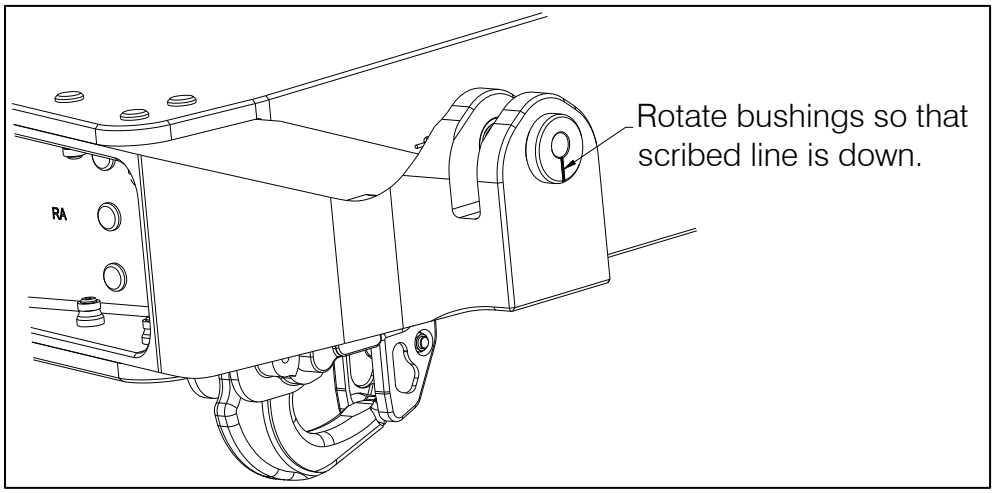

8. Use the Frame Support and floor jack to raise the Frame Assembly with the Lug Assemblies. Apply just enough pressure to hold the Lug Assemblies firmly on the belly yet allowing them to be tapped into position if necessary. Use **CAUTION** to not exert a damaging force with the jack.

Figure 3.5 Positioning Lug Assemblies with Recommended Frame Support

This document is proprietary to Onboard Systems Int'l. Disclosure or reproduction is not allowed. © 2025 Onboard Systems Int'l., all rights reserved.

9. Center the Lug Assemblies within the slots of the Frame Assembly arms using the provided shims P/N 235-332-00, inserting one shim on each side of the Lug Assemblies. Measure the remaining gaps on each side and as needed, fill these gaps with shim stock.
10. Ensure that the minimum distance edge requirements as established above are still met. Move the Frame Assembly on the floor jack as needed to center the Frame Assembly in the side to side and fore-aft directions.
11. Adjust the footprint of the Lug Assemblies if necessary, maintaining the edge distance requirements.
12. With the Lug Assemblies held in position using the shims to minimize their rotation within the slot of the Frame Arms, spot-drill the inboard holes from the keel beam lower flange through the Lug Assemblies with a no. 30 drill.
13. Temporarily secure the lug assemblies using Cleco-type fasteners through the inboard holes. Remove the quick release pins and lower the Frame Assembly if this is being used.
14. On the outboard side, back drill the two holes from the Lug Assemblies through the side body panels with a no. 40 drill.
15. Ensure the center of the spot-drilled holes on the Lug Assemblies are within the limits shown in Figure 3.3.
16. If the hole centers do not meet the minimum distance requirements, remove the marking from the side-body panels and repeat previous steps.
17. As needed, identify the location of each Lug Assembly and remove them from the side-body panels.
18. Drill the spot-drilled inboard holes on the Lug Assemblies with a no. 30 drill. These holes will be opened up to their final size when the Keel Beam Fittings are installed.

The following instructions are for the keel beam fittings. For differentiating the eight Keel Beam Fittings, their P/Ns are engraved/stamped on them and their locations are as defined in the table below. The keel beam fittings are installed in pairs.

Keel Beam Fitting P/N	**Installation Location**
292-147-00, 292-148-00	**Forward** position on **right** keel beam
292-151-00, 292-152-00	**Aft** position on **right** keel beam
292-145-00, 292-146-00	**Forward** position on **left** keel beam
292-149-00, 292-150-00	**Aft** position on **left** keel beam

This document is proprietary to Onboard Systems Int'l. Disclosure or reproduction is not allowed. © 2025 Onboard Systems Int'l., all rights reserved.

6. Temporarily install the Keel Beam Fittings on the keel beams and temporarily install four bolts (P/N 510-456-00), washers (P/N 510-910-00), and nuts (P/N 510-478-00) at inboard holes and through the holes in the keel beam stiffeners. Tighten the nuts.

At each of the four pairs of Keel Beam Fittings, perform the following.

7. At three locations, measure the outboard vertical gap between the Keel Beam Fittings.
8. The provided metallic laminated shim (P/N 235-317-00) has laminations of .003 inch (0.08 mm). Peel as needed to fill the gap between the keel beam fittings. The maximum thickness allowed for the shim is 0.015" (0.38 mm).
9. As needed, identify and record the location of the shim. The shim can be trimmed to match the profile of the keel beam fittings.
10. Position the shim flush with the step on the keel beam fitting and hold it in place with masking tape or equivalent.
11. Match drill eight Ø0.190/0.196" (4.82/4.97 mm) holes from the keel beam fitting through the shim with a no. 10 drill. Deburr the holes.
12. At the bottom of the keel beam fittings, measure the gap in two places: between the lower keel beam flange and between the side-body panel.

The composite shims (P/N 292-156-00 and P/N 292-157-00) for these locations have laminations of .002/.003". Shim P/N 292-156-00 is installed on the outboard side, between the keel beam fitting and the side-body panel and P/N 292-157-00 is installed between the keel beam fitting and the flange of the keel beam.

13. Peel the shims as needed to fill the gaps at each keel beam fitting.
14. Identify and record the location and thicknesses of each shim. One method is to use a pencil to write the thickness of the required shim on the adjacent keel beam fitting surface or keel beam.
15. With the shims in position, temporarily assemble five bolts (P/N 510-456-00), washers (P/N 510-910-00), and nuts (P/N 510-478-00) through the outboard holes of the keel beam fittings. Tighten the nuts.
16. On the inboard side, locate and match drill the holes from the side-body panels through the shims and the keel beam fittings with a No. 30 drill.

Open the holes in the Lug Assemblies, side-body panel, shims and Keel Beam Fittings as follows.

17. Place the lug assemblies in position on the previously identified area on the side-body panel. Ensure the fitting is in contact with the panel and cannot move.

This document is proprietary to Onboard Systems Int'l. Disclosure or reproduction is not allowed. © 2025 Onboard Systems Int'l., all rights reserved.

18. Drill out the holes to Ø0.1285" (3.26 mm) with a no. 30 drill.
19. Ream these holes (in the external lugs and keel beam fittings) to 0.187" (4.75 mm) with a carbide reamer.
20. Open the holes to Ø0.190/.196 (4.83/4.98 mm) with a no. 10 drill.
21. Remove the nuts, washers and bolts from the keel beam fittings.
22. Remove the nuts, washers, and bolts from the hardpoint fittings.
23. Remove the keel beam fittings and shims.
24. Deburr all holes.

Prep the Radius Blocks per the following steps.

25. Position a Radius Block on each horizontal flange of the Lug Assembly and match drill, with a no. 10 drill, the Radius Blocks with the two holes in the Lug Assembly.
26. Identify and record the Radius Block positions on each Lug Assembly.
27. Deburr the holes.

At this point, all of these parts are ready for final installation. Complete the installation of these parts per the following.

28. Apply sealant (MIL-PRF-81733, Bell material Code C-251) to the faying surfaces of the shims and keel beam fittings and while the sealant is wet, position the shims on the keel beam fittings.
29. Apply sealant (MIL-PRF-81733, C-251) to the faying surfaces of the shims, keel beam fittings, left keel beam, and side-body panel as shown.
30. Apply unreduced epoxy polyamide primer (MIL-PRF-23377) or a corrosion preventative compound such as CA-1000 to the shanks of the bolts.
31. While the sealant is wet, install the keel beam fittings w/ shims on the keel beam with the bolts, washers, and nuts. Tighten the nuts to 52 - 70 in-lbs. Clean off excess sealant.

Install each of the four Lug Assemblies per the following. Verify the correct location for each of the three P/Ns (forward positions use the same P/N) before continuing.

32. For bonding purposes, remove the paint and primer on the belly at the right forward Lug Assembly position only.

This document is proprietary to Onboard Systems Int'l. Disclosure or reproduction is not allowed. © 2025 Onboard Systems Int'l., all rights reserved.

Figure 3.6 Paint/Primer Removal for Electrical Bonding purposes

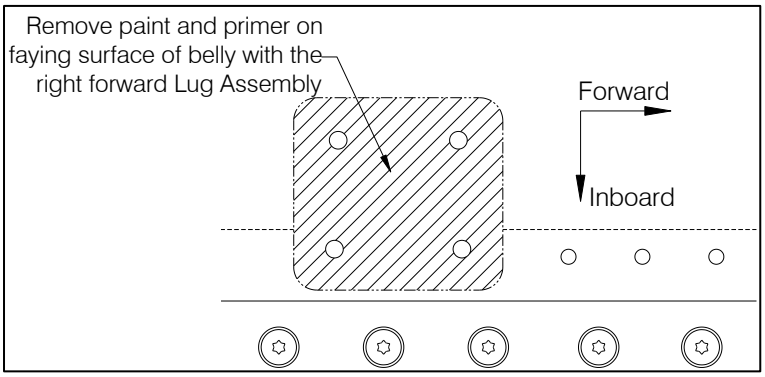

33. Apply sealant to the faying surfaces of the Lug Assemblies **(except for the right forward position)** and the side-body panel.
34. Apply sealant to the faying surfaces of the Lug Assemblies and the Radius Blocks.
35. Apply unreduced epoxy polyamide primer or a corrosion preventative compound such as CA-1000 to the shank of the bolts.
36. While the sealant is wet, position the Lug Assemblies on the side-body panel and secure with bolts, washers, and nuts (ref Figure 3.1). Torque the nuts to 52-70 in-lbs.
37. Apply sealant around the perimeter of the right forward Lug Assembly to seal the bonded area.
38. Clean off excess sealant.

This document is proprietary to Onboard Systems Int'l. Disclosure or reproduction is not allowed. © 2025 Onboard Systems Int'l., all rights reserved.

3.3 Miscellaneous Fixed Provisions Supporting Parts

This section covers the installation of components to support the fixed electrical wiring harnesses/hydraulic hoses and drilling of holes in the airframe for routing of the hydraulic hoses. The components include the following:

1. Connector Bracket Assembly (P/N 232-896-00) mounted on the belly of the helicopter, just forward of the RH forward lug assembly. The Connector Bracket Assembly supports the electrical and hydraulic hose connectors of the fixed provisions. Install this assembly per Section 3.3.1.

   For the **200-493 and 200-494 series retrofit kits**: the Connector Bracket Assembly replaces the Bell Connector Bracket to accommodate the hydraulic release connectors and fit under the Fairing Assembly included with the Onboard Systems' cargo hook kits.

2. Ground Plate (P/N 235-313-00) mounted on the RH keel beam. The Ground Plate provides the electrical ground termination for the cargo hooks' electrical release systems. Install the Ground Plate per Section 3.3.2.

   This part is omitted in the **200-493 and 200-494 series retrofit kits** as the existing Ground Plate installed by Bell is re-used.

3. Standoffs for the Relay Module Assembly (P/N 232-885-00) mounted on the nose aft bulkhead. The Relay Mount Plate supports the two cargo release relays. Install the standoffs per Section 3.3.3.

   These parts are omitted in the **200-493 series retrofit kits** as the existing Bell Dual Cargo Hook System's relays are re-used.

4. Provisions for mounting the Fairing Assembly (P/N 232-894-00). The Fairing Assembly is installed forward of the Cargo Hook/Frame Assembly. Install the provisions for supporting the Fairing Assembly per Section 3.3.4

   For the **200-493 series and 200-494 series retrofit kits,** the RH and LH side Brackets (P/N 235-316-00 and P/N 235-316-01) replace the existing Bell fairing brackets.

5. Standoffs for supporting the routing of the hydraulic hoses and electrical harnesses through the airframe. Install per Section 3.3.5

3.3.1 Connector Bracket Assembly Installation

The Connector Bracket Assembly (P/N 232-896-00) is installed on the right side of the belly panel (just forward of the forward Lug Assembly) per the following.

The Connector Bracket Assembly must be installed regardless of existing cargo hook provisions on the aircraft.

1. If present, remove the existing Connector Bracket.

This document is proprietary to Onboard Systems Int'l. Disclosure or reproduction is not allowed. © 2025 Onboard Systems Int'l., all rights reserved.

2. Remove and discard four screws from the belly panel as indicated below. A cutout is provided for the aft most screw that falls within the connector bracket envelope thus this screw isn't removed.
3. Prepare the faying surfaces of the Connector Bracket Assembly and the belly panel for electrical bonding requirements by removing paint/primer in the area per the dimension shown in Figure 3.7.

Figure 3.7 Bonding Area for Connector Bracket

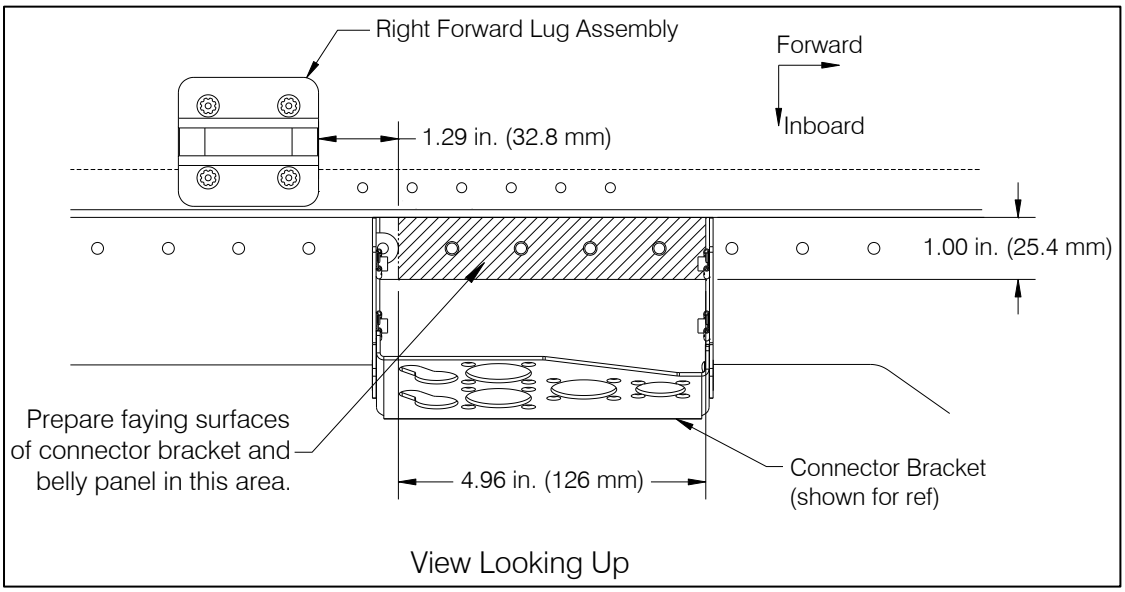

4. Apply corrosion preventative compound (Bell material code C-586) to the shanks of the screws, do not apply to the threads.
5. Secure the Connector Bracket Assembly to the belly panel with the four screws (P/N 511-274-00) and tighten the screws to 20-25 in-lb.

This document is proprietary to Onboard Systems Int'l. Disclosure or reproduction is not allowed. © 2025 Onboard Systems Int'l., all rights reserved.

Figure 3.8 Connector Bracket Fasteners

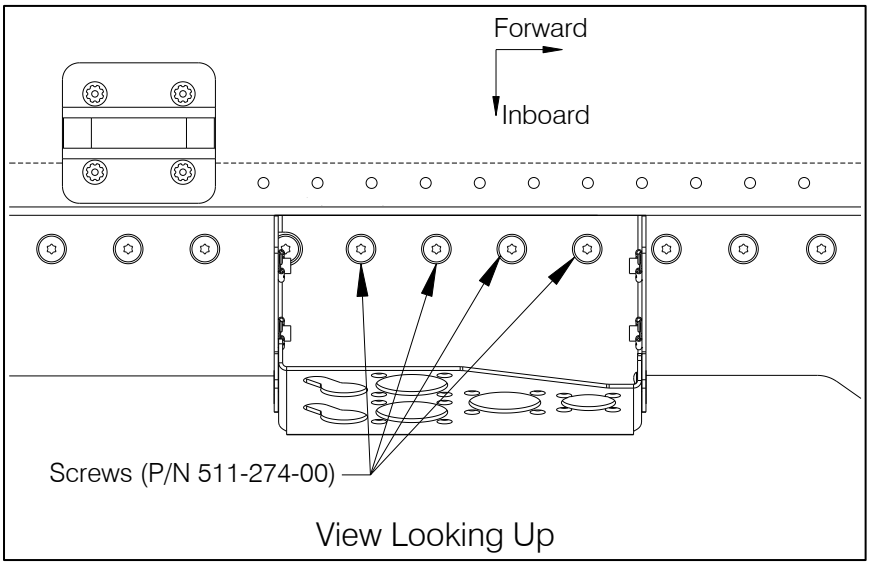

6. Connector labels are provided separately in a bag with the Connector Bracket Assembly so they can be applied after paint (if the bracket is to be painted). Apply these labels as shown below.

Figure 3.9 Connector Bracket Holes

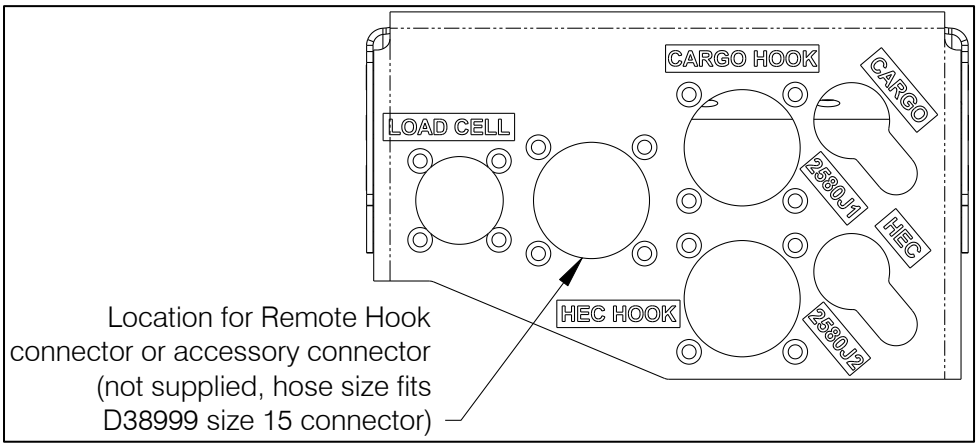

A Fairing (P/N 232-916-00) for the Connector Bracket is provided with the kits. It is used **only** when the Dual Cargo Hook Frame and the large Fairing are **removed** from the helicopter. It provides protection for the exposed hoses and harnesses and their connectors in this configuration. When needed, attach it to the Connector Bracket with the four screws (P/N 510-633-00) and washers (P/N 510-419-00) provided, otherwise retain it for future use.

This document is proprietary to Onboard Systems Int'l. Disclosure or reproduction is not allowed. © 2025 Onboard Systems Int'l., all rights reserved.

Figure 3.10 Connector Bracket Fairing

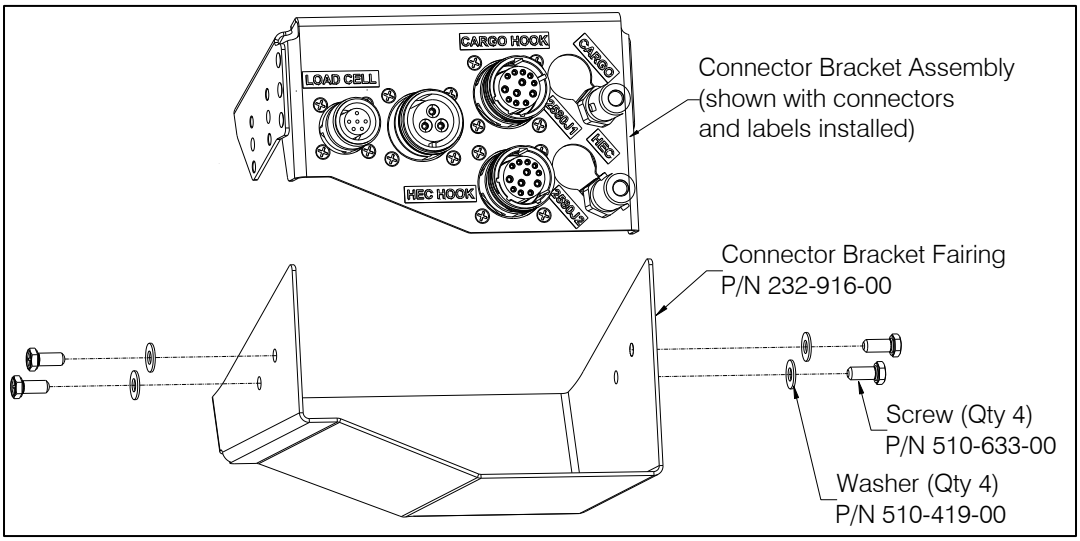

3.3.2 Ground Plate Installation

The Ground Plate (P/N 235-313-00) is installed on the RH keel beam, just aft of the forward keel beam fittings. The Ground Plate is not included with the retrofit kits as the existing Ground Plate is re-used.

1. Position the Ground Plate on the stiffener of the RH keel beam at the dimensions as shown in Figure 3.11.

This document is proprietary to Onboard Systems Int'l. Disclosure or reproduction is not allowed. © 2025 Onboard Systems Int'l., all rights reserved.

Figure 3.11 Ground Plate Installation

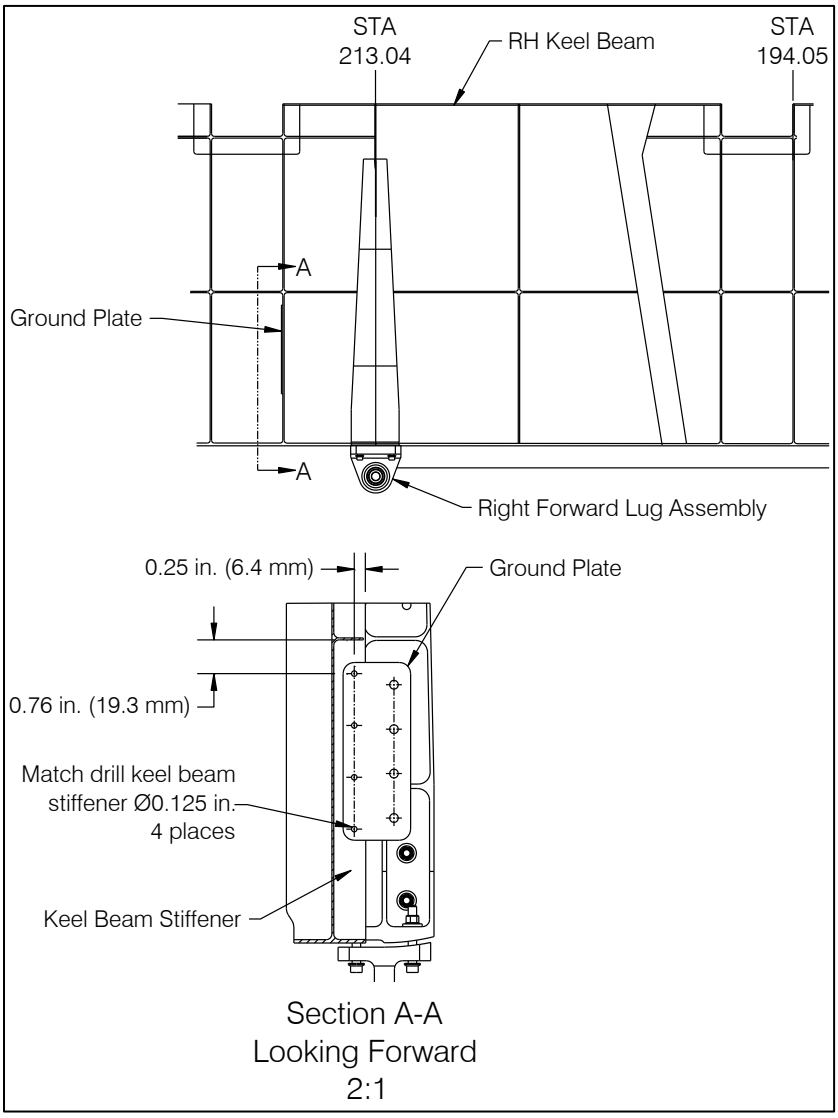

2. Match drill the four Ø0.125 inch (3.2 mm) holes from the Ground Plate through the keel beam stiffener.
3. Prep the faying surfaces for electrical bonding by removing paint/primer.
4. Secure the Ground Plate to the aft side of the stiffener with the supplied four rivets (P/N 510-282-00).
5. Check that the electrical bonding between the Ground Plate and keel beam meets the Bell Class R-I bonding requirements (per BHT-ELEC-SPM, Chapter 8).
6. Seal the perimeter of electrical bonding area between the Ground Plate and keel beam with sealant (MIL-PRF-23377, C-251).

This document is proprietary to Onboard Systems Int'l. Disclosure or reproduction is not allowed. © 2025 Onboard Systems Int'l., all rights reserved.

3.3.3 Relay Module Assembly Standoffs

The Relay Module Assembly (P/N 232-885-00) includes the two cargo release relays. It is installed on the right side of the nose aft bulkhead and is installed later. This section defines the installation of the four standoffs (P/N 500-527-00) to support it. The Relay Module Assembly's mount plate has the pre-drilled hole pattern to fit the locations of the standoffs.

The Retrofit Kit P/N 200-493 series for the Bell dual cargo hook system does not include these items as the Bell dual cargo hook system's existing Relay Mount Plate and relays are re-used. Skip this section if installing a 200-493 series kit.

1. Remove the panel to access the RH side of the aircraft nose.
2. Position each of the four standoffs on the nose aft bulkhead per the dimensions in Figure 3.12 below.

Figure 3.12 Standoffs for Relay Mount Plate

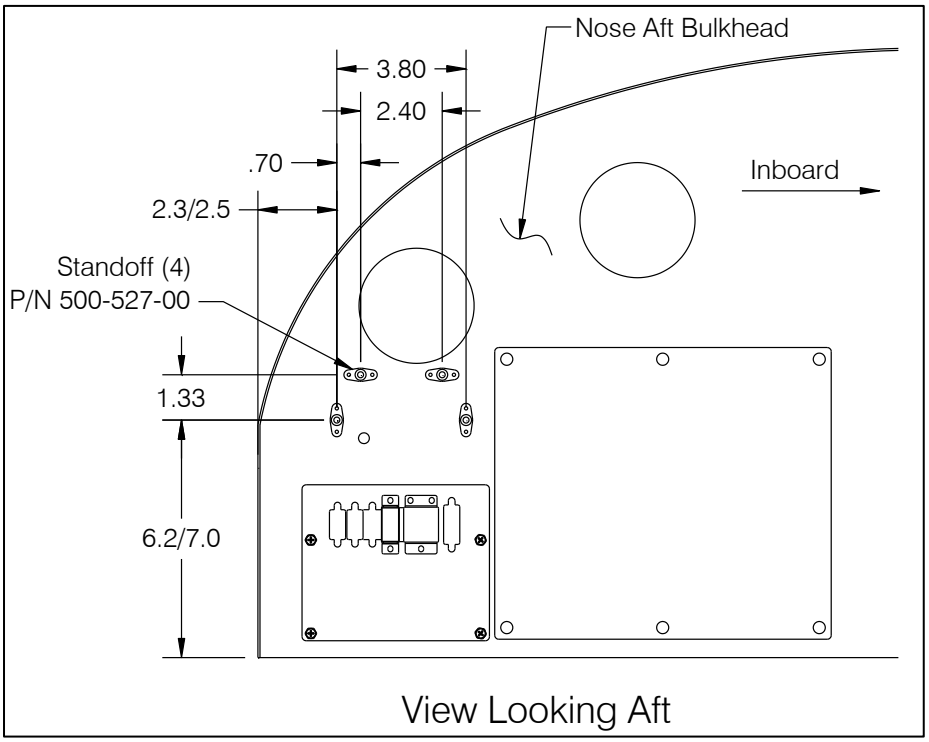

3. Using the standoffs as a template drill eight Ø0.098 holes (2.49 mm) through the nose aft bulkhead. Deburr the holes.
4. For electrical bonding purposes, bare the faying surfaces of the standoffs and the bulkhead by removing the finishes.
5. Install each of the four standoffs on the bulkhead with two rivets (P/N 511-275-00 (MS20470AD3-4) or length as required).
6. Verify the electrical bonding meets the Bell Class R-II requirements.

This document is proprietary to Onboard Systems Int'l. Disclosure or reproduction is not allowed. © 2025 Onboard Systems Int'l., all rights reserved.

7. Seal the electrical bonding area of the standoffs and the bulkhead with MIL-PRF-23377 (C-251) sealant.
8. In addition to installing the standoffs to support the relays, drill a hole in the adjacent existing nose relay panel to support a clamp that will be used to route the wires to the relays.

Figure 3.13 Hole for Wire Harness Support

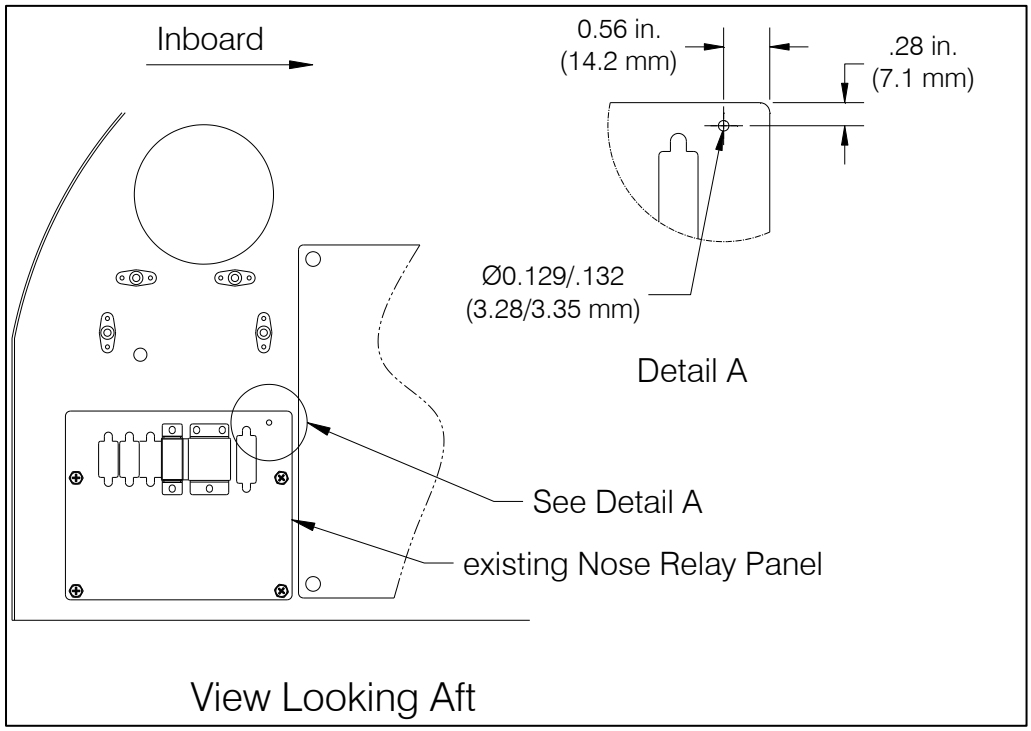

This document is proprietary to Onboard Systems Int'l. Disclosure or reproduction is not allowed. © 2025 Onboard Systems Int'l., all rights reserved.

3.3.4 Fairing Assembly Supports

The Fairing Assembly is supported by the following modifications to the belly.

- Two Retainers installed at existing fasteners on the belly (ref Figure 3.14) which the outer forward flanges of the Fairing are slid under.
- Two Fairing Brackets, a LH and a RH configuration, that are installed just forward of the forward Lug Assemblies. These receive the ¼ turn fasteners at the LH and RH side of the fairing. An installation aid kit (P/N 139-216-00) is provided as an optional means to accurately position these. If the Bell fairing brackets are installed, these must be removed.
- Two ¼ turn receptacles at STA 202.16 installed on the inside of the forward fuel sump cover that accept the ¼ turn fasteners at the center forward flange of the fairing.

Figure 3.14 Fairing Overview

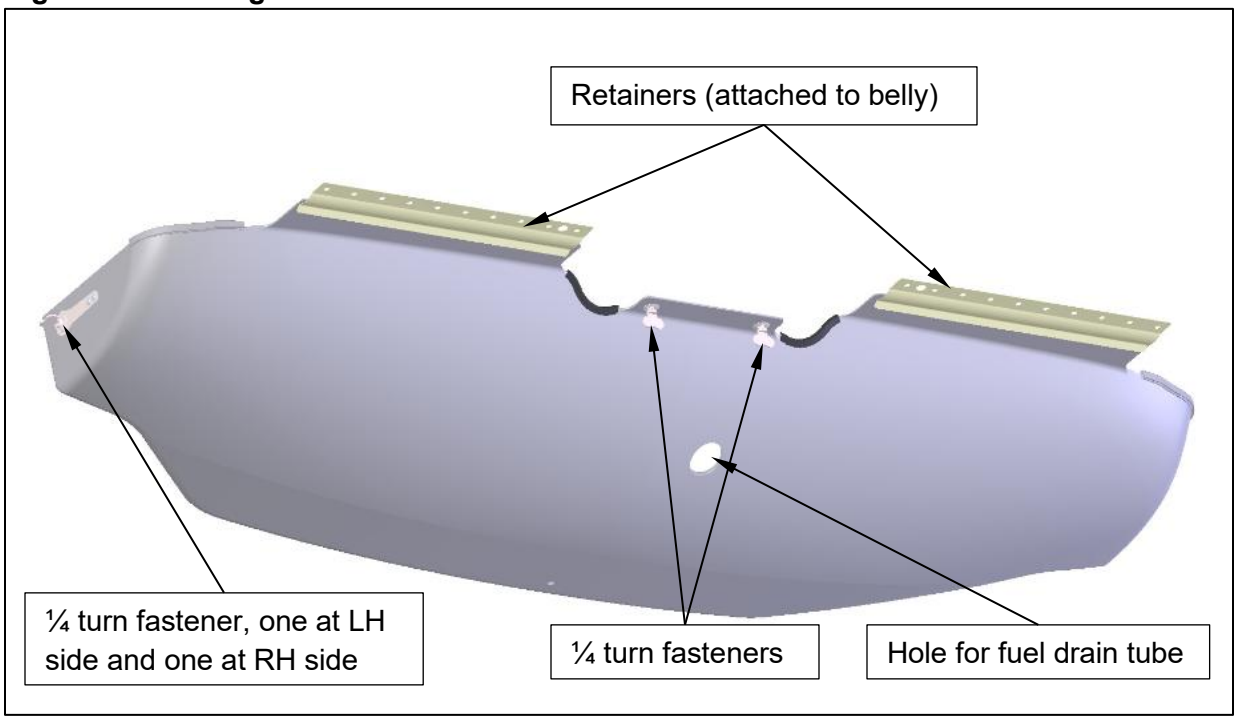

Install the two Retainers that will capture the forward outer flanges of the Fairing. Install P/N 235-323-00 to the right of center (shown below) and P/N 235-315-00 to the left of center per the following. These can be differentiated by the larger hole being oriented inboard.

If the Bell retainers (as part of the TC installation) are present, they can be re-used and the steps below to install the retainers are skipped.

1. Remove the ten (10) screws from each side of the belly panel and retain.

This document is proprietary to Onboard Systems Int'l. Disclosure or reproduction is not allowed. © 2025 Onboard Systems Int'l., all rights reserved.

2. Apply MIL-PRF-81733 sealant (C-251) to the faying surfaces of the Retainers and belly panel.
3. Apply corrosion preventative compound (Bell material code C-586) to the threads of the screws.
4. Position the Retainers on the belly, align the holes and re-install the screws. Torque the screws to 20-25 in-lbs.

Figure 3.15 Retainer Installation (right side shown)

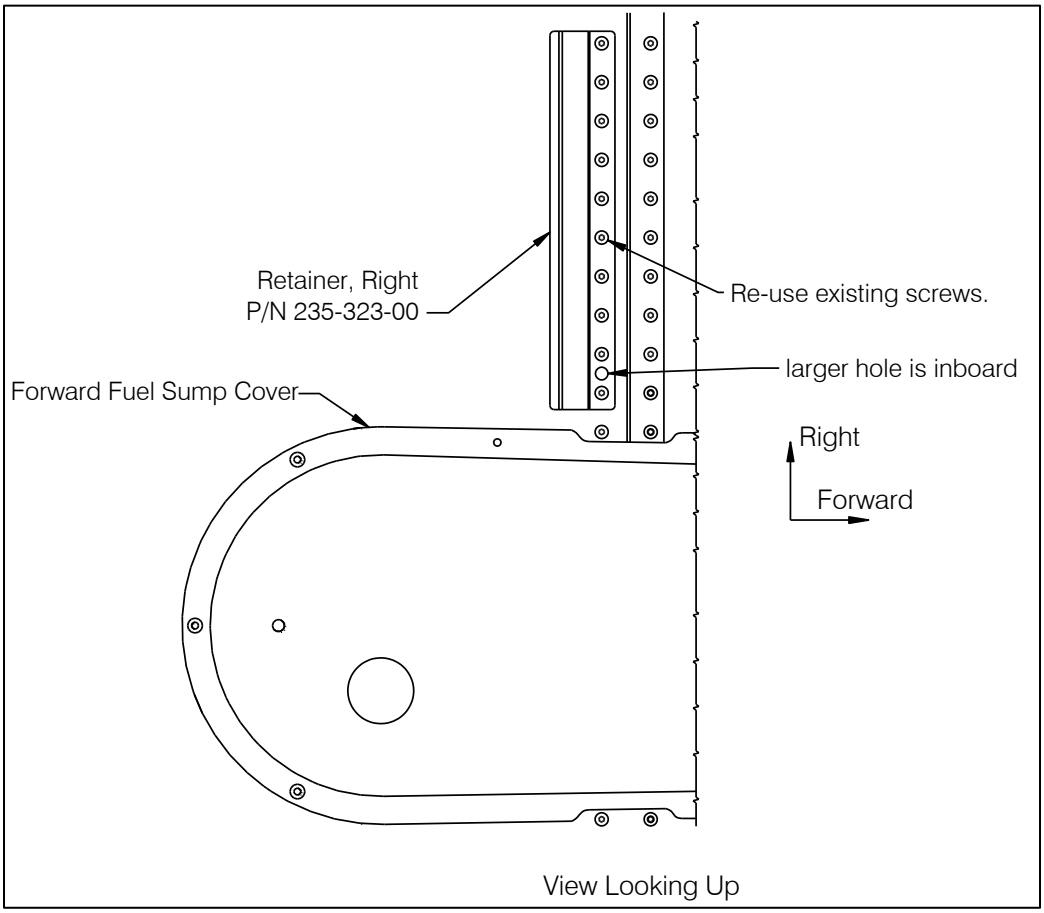

This document is proprietary to Onboard Systems Int'l. Disclosure or reproduction is not allowed. © 2025 Onboard Systems Int'l., all rights reserved.

Install the two Fairing Brackets (P/N 235-316-00 (LH side) and 235-316-01 (RH side)) per the following.

NOTICE

If retrofitting a Bell 429 with an existing cargo hook installation, the existing Brackets will need to be removed as they are NOT compatible with Fairing Assembly P/N 232-894-00.

5. Remove the four (4) existing rivets (two at each location) that go through the keel beam outboard flange at the Fairing Bracket installation location shown in Figure 3.16 (Bracket positions are symmetrical about centerline).

Figure 3.16 Fairing Bracket Location (LH shown)

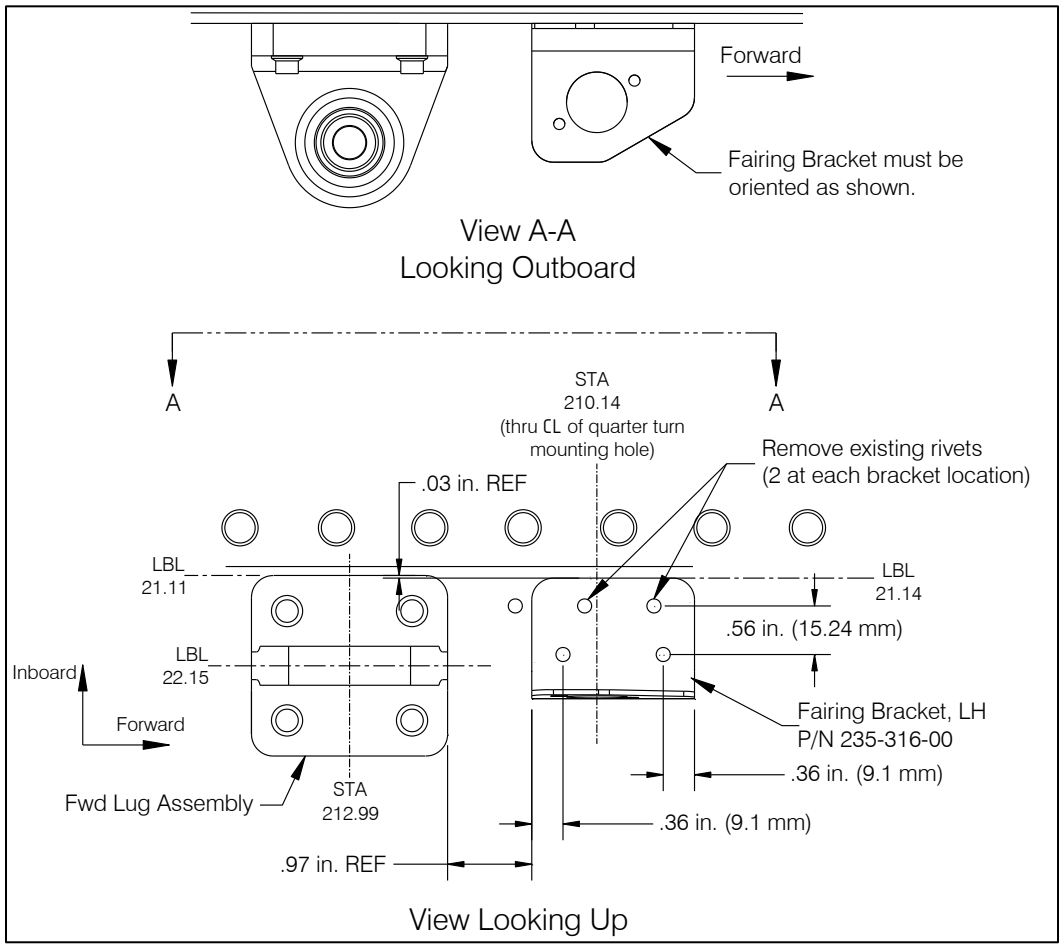

6. Carefully remove the ¼ turn fasteners from the center forward flange of the Fairing Assembly and disengage the ¼ turn fasteners on the left and right side.

This document is proprietary to Onboard Systems Int'l. Disclosure or reproduction is not allowed. © 2025 Onboard Systems Int'l., all rights reserved.

7. Position the Fairing Brackets on the inside of the LH and RH side of the Fairing Assembly and temporarily secure them tight to the wall of the fairing through the holes with the Bracket Mounting Block and supplied bolt and nut (the Mounting Block, bolt, nut, large washer and other hardware shown below are parts of the installation aid kit P/N 139-216-00). Position the large washer between the Fairing Bracket and the inside of the Fairing.

   If just the Fixed Provisions Kit is being installed (i.e. – Fairing P/N 232-894-00 is not available), use the Spacer in its place.

   The Locator Bracket locates the Fairing off the forward Lug Assemblies in a later step.

Figure 3.17 Fairing Bracket Installation Overview

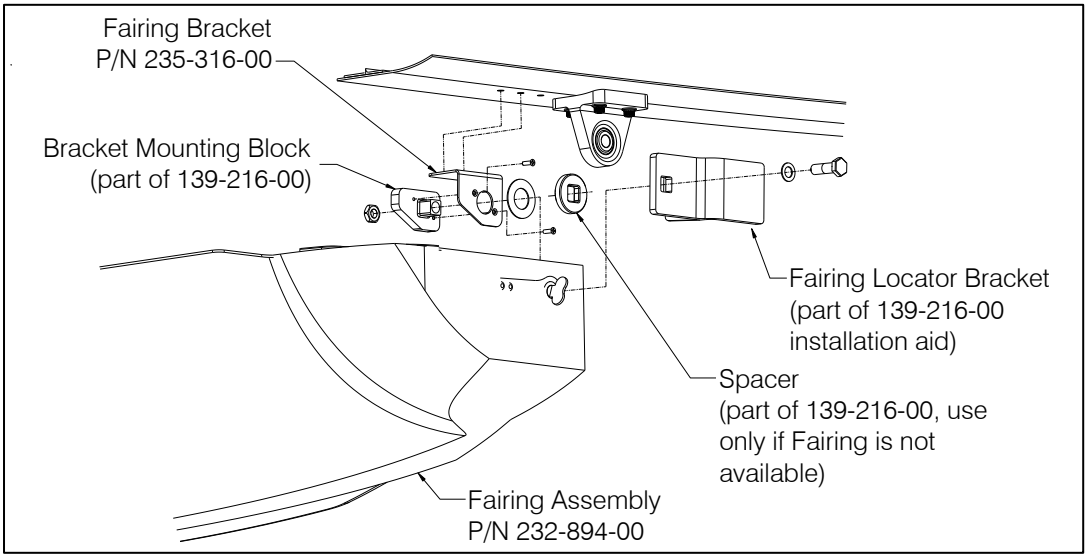

NOTICE

If retrofitting a Bell 429 with an existing cargo hook installation, use the receptacles in the fuel sump cover for the fore-aft location.

8. Lift the fairing up to the belly, slide its forward flanges under the retainers, and center it about the aircraft centerline in the lateral direction. A floor jack may be helpful to hold it in position against the belly.

9. Position the Fairing with the Locator Bracket (of 139-216-00) nested on the forward outboard corners of the respective Lug Assembly (as shown below).

This document is proprietary to Onboard Systems Int'l. Disclosure or reproduction is not allowed. © 2025 Onboard Systems Int'l., all rights reserved.

Figure 3.18 Locating Fairing

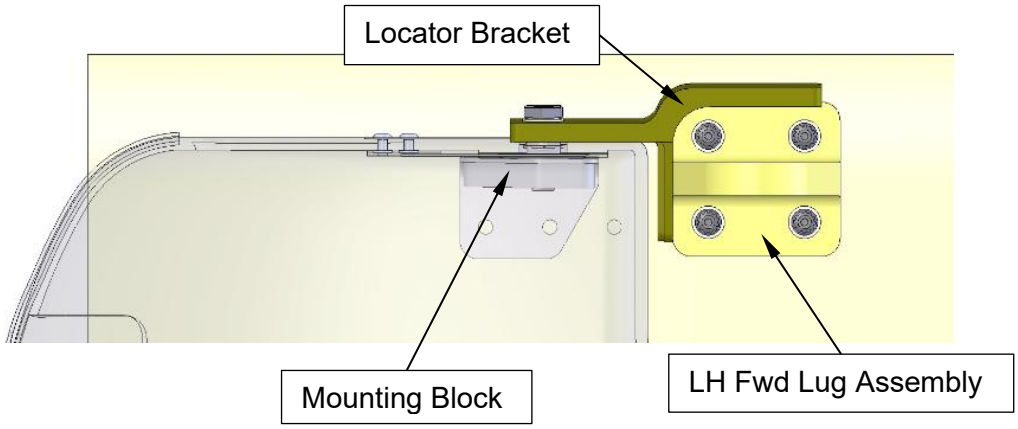

View Looking Up

10. From inside the aircraft, transfer the location of the two inboard rivet holes through the keel beam lower flange and side-body panel to the respective Bracket.
11. At this point, use the two holes in the center fairing flange to mark the position for the receptacles to be installed in the forward fuel sump cover.
12. Lower the fairing and locate the marked locations for the two holes.
13. Verify that there is at least 2D edge margin for the Ø0.129" holes to be drilled. If the bracket overlaps one of the existing inboard rivets other than the two drilled out, remove material (e.g. – grinding) from the bracket as needed to clear the rivet head.
14. Drill 0.129" (3.2 mm) holes at the two inboard marked locations and drill two more holes outboard of these locations* (as shown in Figure 3.16). Deburr the holes.

NOTICE

**If the Bell fairing brackets were removed, use the location of the removed outboard rivet that is overlapped by the provided bracket as one of the locations.*

15. Temporarily secure the Brackets to the side-body panels at the inboard holes with Cleco-type fasteners.
16. Back-drill the outboard holes to 0.129" through the side-body panels.

This document is proprietary to Onboard Systems Int'l. Disclosure or reproduction is not allowed. © 2025 Onboard Systems Int'l., all rights reserved.

17. Remove the Brackets and deburr the holes.
18. Prepare the faying surfaces of the Brackets and side-body panels for the Bell Class S electrical bonding requirements (BHT-ELEC-SPM, Chapter 8).
19. Apply sealant (MIL-PRF-23377) to the rivets (P/N 511-280-00 and P/N 511-281-00) and secure the Fairing Brackets to the side-body panels with the longer rivets through the inboard holes.
20. Attach the supplied ¼ turn receptacles (P/N 511-256-00) to the Fairing Brackets with rivets (P/N 511-278-00).
21. Verify the electrical bonding between the Brackets and the mating side-body panels meets the Bell Class S electrical bonding requirements.
22. Cover the rivets with sealant (MIL-PRF-81733 (C-251)).

For attachment of the Fairing Assembly through its forward two (2) holes, attach two ¼ turn receptacles to the forward fuel sump cover per the following, referring to Figure 3.19.

If the receptacles (as part of the TC installation) are present, they can be re-used and the steps below to install them are skipped.

Figure 3.19 Sump Cover Receptacles

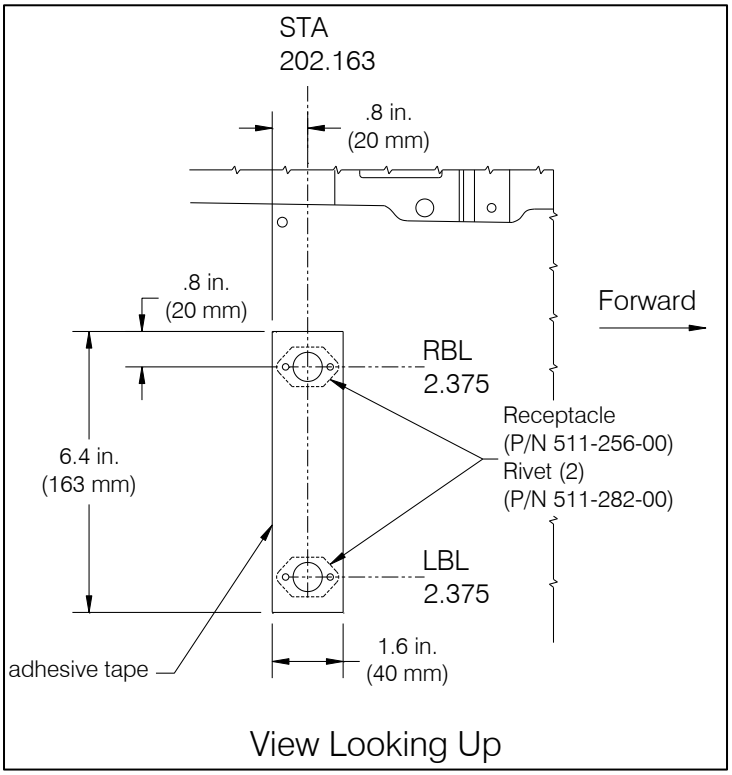

23. Remove the forward fuel sump cover (refer to BHT-429-MM-1, Chapter 53).

This document is proprietary to Onboard Systems Int'l. Disclosure or reproduction is not allowed. © 2025 Onboard Systems Int'l., all rights reserved.

24. Drill a Ø0.129" (#30 drill) pilot hole at the center of each hole on the sump cover marked previously. Deburr the holes.
25. Open the two holes to Ø0.683/0.693" (17.35/17.60 mm) using an 11/16" drill. Deburr the holes.
26. Using the receptacle as a template drill four Ø0.129" holes (two at each receptacle) through the sump cover. Deburr the holes.
27. Dimple the sump cover for the rivets.
28. Position the receptacles on the inside surface of the sump cover.
29. Apply sealant to the rivets and secure the receptacles to the sump cover with the rivets. Wipe off excess sealant.

Cut the provided Leading Edge Tape (P/N 520-144-00) to size (6.4" x 1.6") as indicated in Figure 3.19 and apply to the outer surface of the sump cover (over the holes for the receptacles) per the following.

30. Clean the bonding surface with isopropyl alcohol. Allow to dry for 30 minutes minimum.
31. Place the tape in position over the holes and apply firm pressure with a roller (e.g.).
32. Cut the tape out at the holes for the receptacles.

This document is proprietary to Onboard Systems Int'l. Disclosure or reproduction is not allowed. © 2025 Onboard Systems Int'l., all rights reserved.

3.3.5 Modifications to Support Hose & Wire Harness Routing

For routing and support of the hydraulic hoses from the connector bracket to the Dual Master Cylinder on the collective, install standoffs per this section. Alternatively, the standoffs may be installed as the hoses are routed (per Section 3.4).

If installing a 400-493 series or 200-494 series retrofit kit for retrofitting a Bell 429 with an existing dual or single cargo hook installation, the standoffs are present to provide support to the RH collective. Additional standoffs only need to be installed if configuration is for LH PIC, otherwise skip this section.

Steps 1 – 5 are specific to installation of the Dual Master Cylinder on the left-hand side collective (for LH PIC), i.e. – routing to the LH collective involves additional length of hose and standoffs. Remove belly panels as needed to access area below collectives and the center pedestal.

1. At the intercostal below the co-pilot seat, just aft of the skid gear tube mark the location for center of a Standoff P/N 500-530-00 as shown in Figure 3.20 below.

Figure 3.20 Standoff at Left Side Intercostal (for LH PIC only)

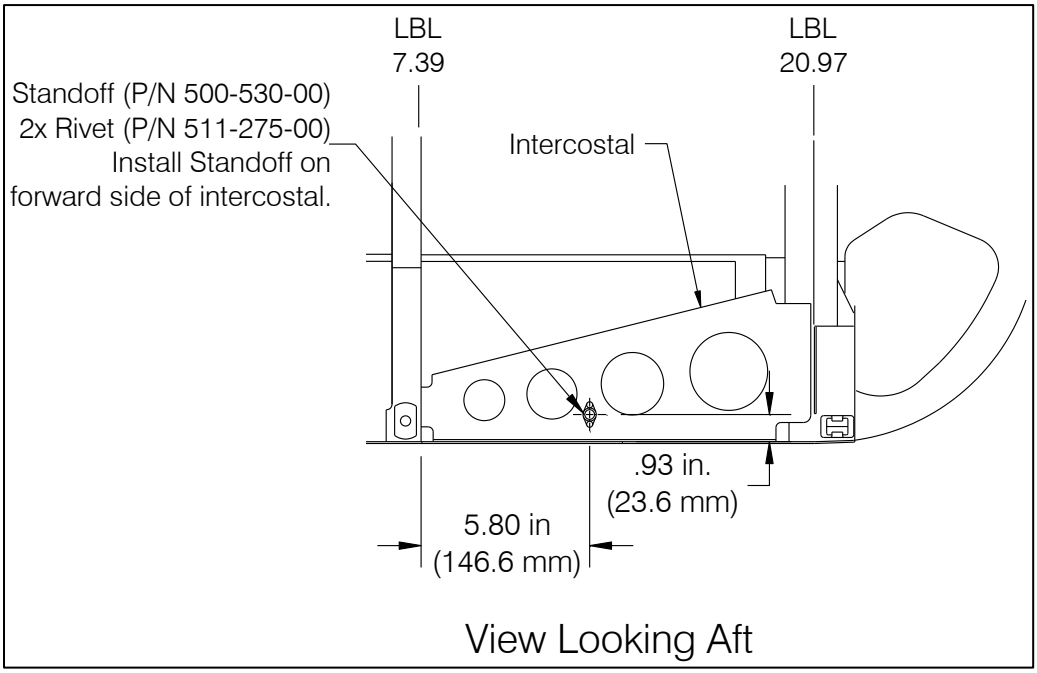

2. Using the Standoff as a template drill two Ø0.098" (2.49 mm) holes through the intercostal. Deburr the holes.
3. Install the Standoff on the forward side of the intercostal with the two rivets (P/N 511-275-00).

This document is proprietary to Onboard Systems Int'l. Disclosure or reproduction is not allowed. © 2025 Onboard Systems Int'l., all rights reserved.

4. Install an adhesive standoff (P/N 500-529-00) on the lower forward-facing end of the pedestal beam and an adhesive cable tie mount (P/N 500-535-00) at the lower forward-facing end of the keel beam at locations shown below. Use the supplied adhesive kits (P/N 520-147-00).

Figure 3.21 Standoffs at LH Pedestal and Keel Beam (LH PIC Only)

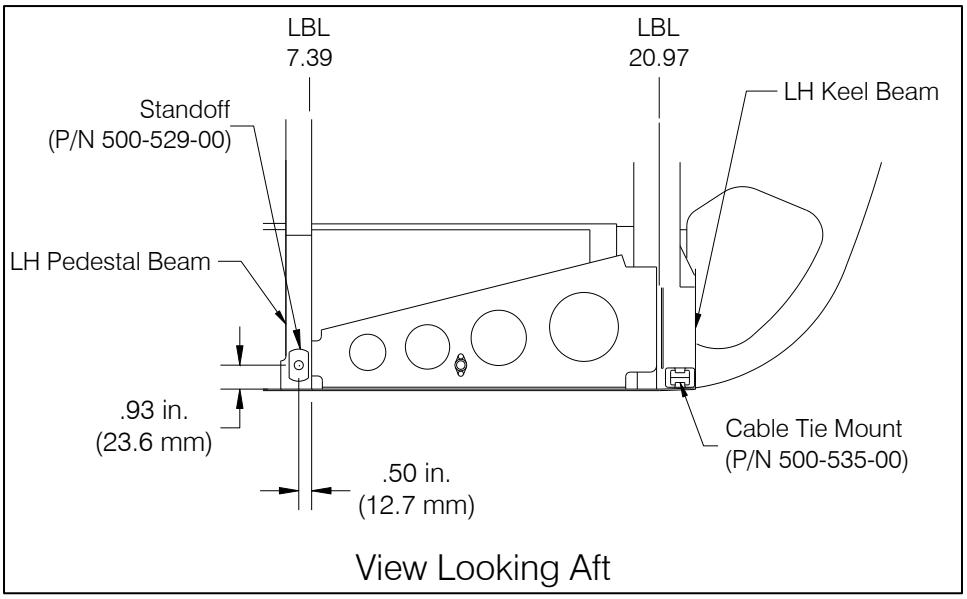

5. On the inside of the panel install an adhesive standoff (P/N 500-533-00) at the approximate location shown below (aft of the existing standoff) using the supplied adhesive kits (P/N 520-147-00).

   It is recommended to wait to secure this standoff until the hoses are routed in order to optimize the routing up to the collective.

Figure 3.22 Standoff Below LH Collective (LH PIC only)

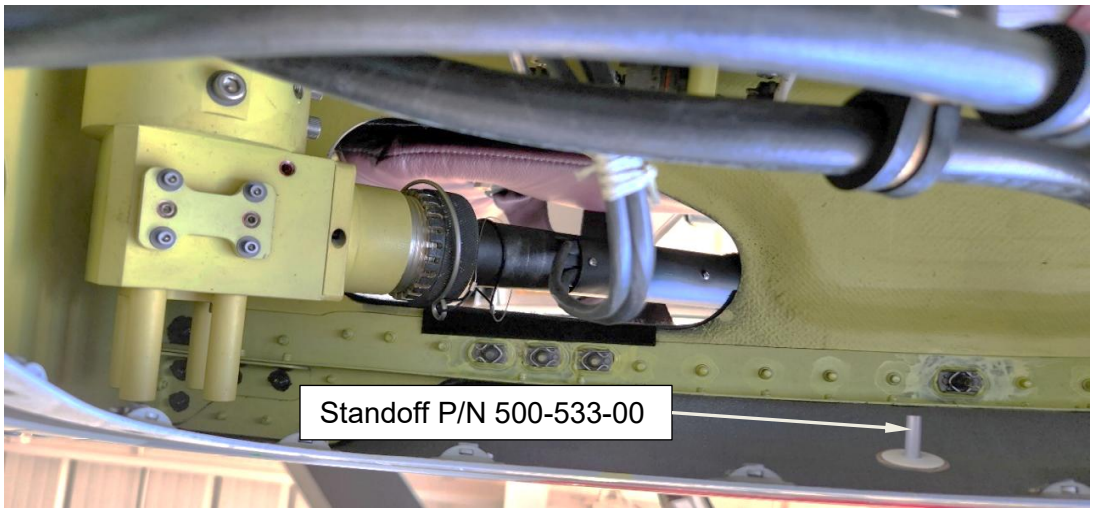

This document is proprietary to Onboard Systems Int'l. Disclosure or reproduction is not allowed. © 2025 Onboard Systems Int'l., all rights reserved.

The following steps are applicable to both LH and RH PIC installation.

If installing a retrofit kit (P/N 200-493 series), standoffs may be present in the locations defined in the following steps. If a standoff is present at the location, omit the respective installation steps.

6. On the right side intercostal, mark the location as shown in Figure 3.23.
7. Using standoff P/N 500-530-00 as a template drill two Ø0.098" (2.49mm) holes through the intercostal. Deburr the holes.
8. Install the standoff on the **aft** side of the intercostal with the two rivets (P/N 511-275-00).
9. For aircraft S/Ns 57081 and subsequent, install a standoff (P/N 500-531-00) on the forward lift frame per the following, referring to Figure 3.23.
   - Using a non-permanent marker, mark the location shown in Figure 3.23.
   - Install the standoff with supplied adhesive (P/N 520-147-00).

Figure 3.23 Standoffs at RH Intercostal and Fwd Lift Frame

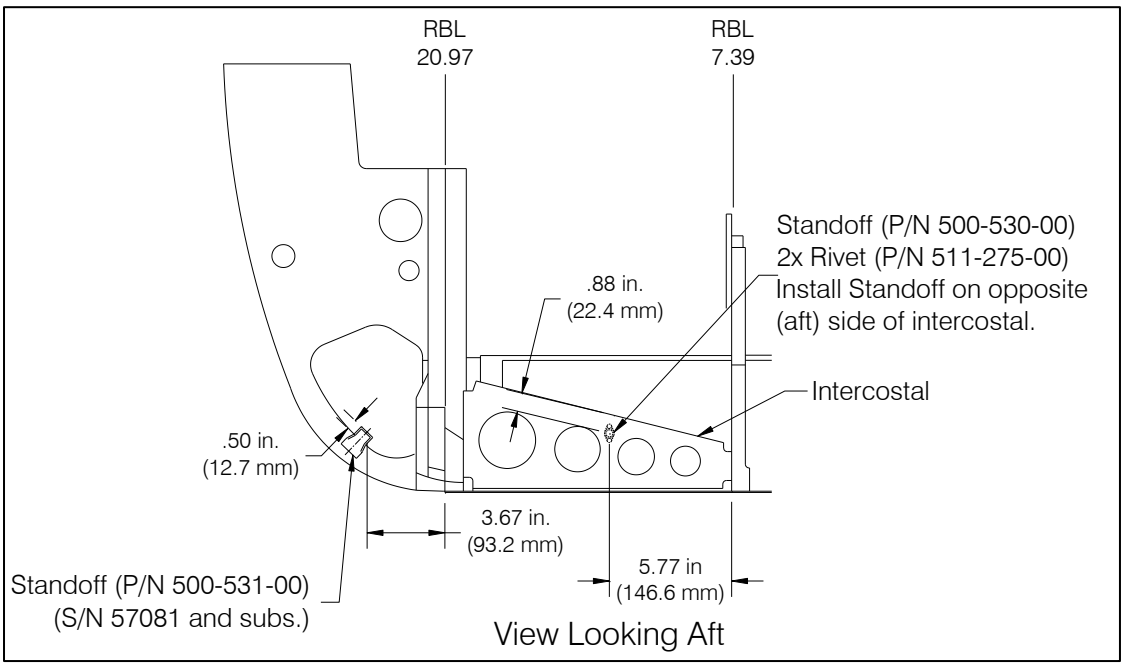

This document is proprietary to Onboard Systems Int'l. Disclosure or reproduction is not allowed. © 2025 Onboard Systems Int'l., all rights reserved.

10. Install a standoff (P/N 500-532-00) on the forward quarter frame as follows, location is aircraft S/N dependent as noted in the figure.
    - Using a non-permanent marker, mark the location shown in Figure 3.24
    - Install the standoff with the supplied adhesive (P/N 520-147-00).

Figure 3.24 Standoff at Forward Quarter Frame

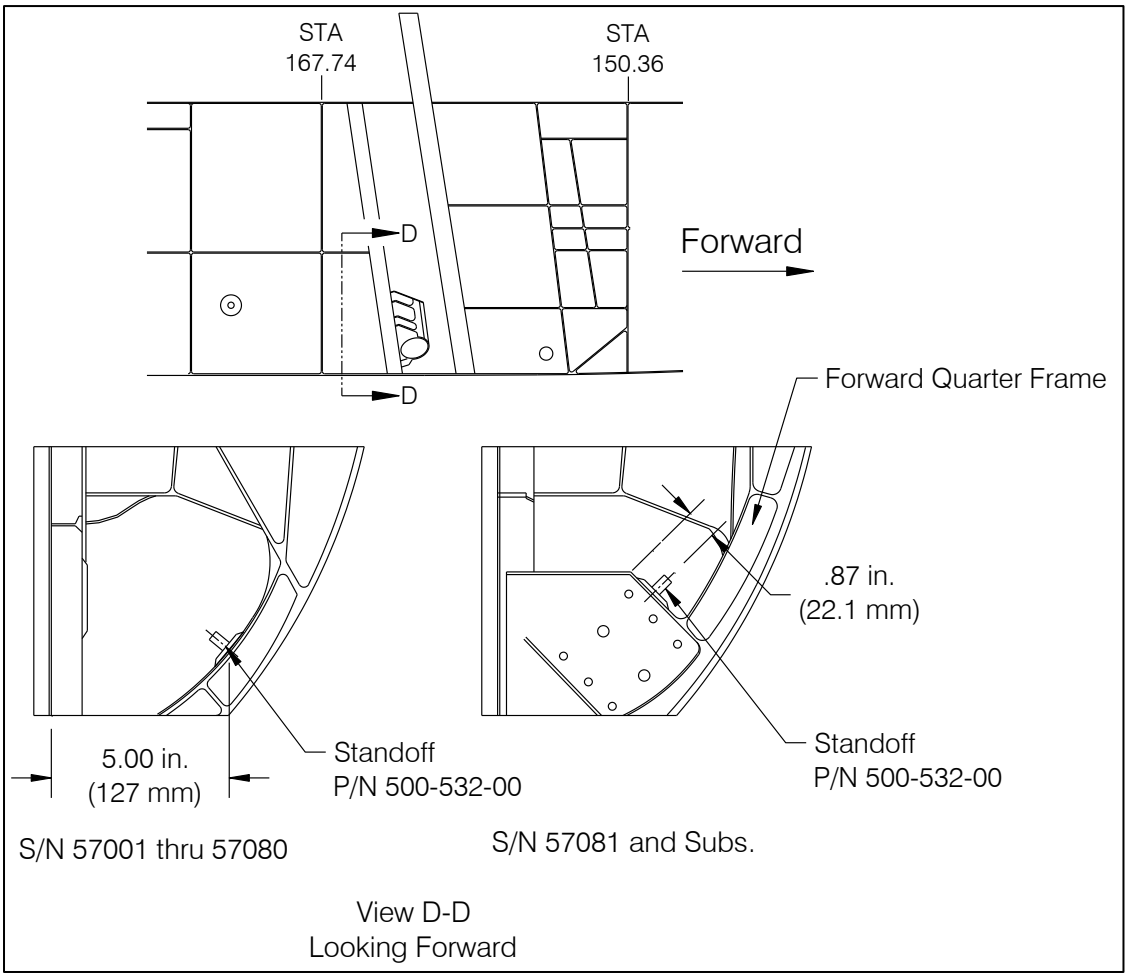

11. For aircraft S/Ns 57001 through 57080 install three adhesive standoffs (P/N 500-533-00) on the RH keel beam per the following.
    - Using a non-permanent marker, mark the three locations per the dimensions shown in Figure 3.25. If another standoff to support existing wires or if equipment is installed in these locations, adjust the standoff location to as near as possible to that as defined.
    - Install the three standoffs with supplied adhesive (P/N 520-147-00).

This document is proprietary to Onboard Systems Int'l. Disclosure or reproduction is not allowed. © 2025 Onboard Systems Int'l., all rights reserved.

Figure 3.25 RH Keel Beam Standoffs (S/N 57001 – 57080)

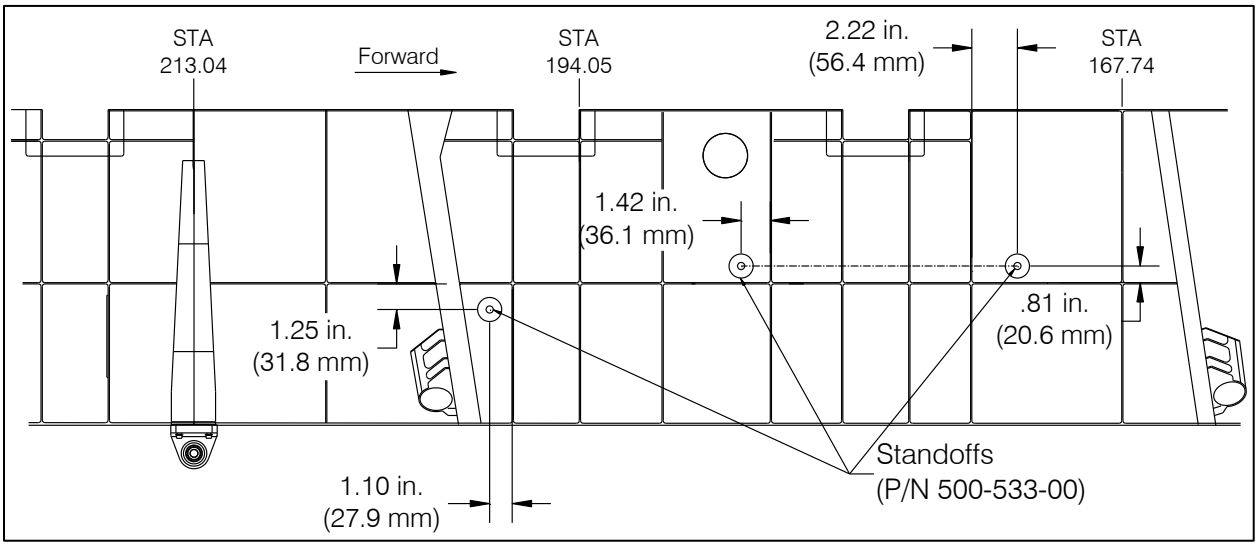

12. For aircraft with S/N 57081 and subsequent install two standoffs (P/N 500-533-00) on the RH keel beam per the following.
    - Using a non-permanent marker, mark the two locations per the dimensions shown in Figure 3.26. If another standoff to support existing wires or if equipment is installed in these locations, adjust the standoff location to as near as possible to that as defined.
    - Install the two standoffs using the supplied adhesive kit (P/N 520-147-00).

Figure 3.26 RH Keel Beam Standoffs (S/N 57081 and subsequent)

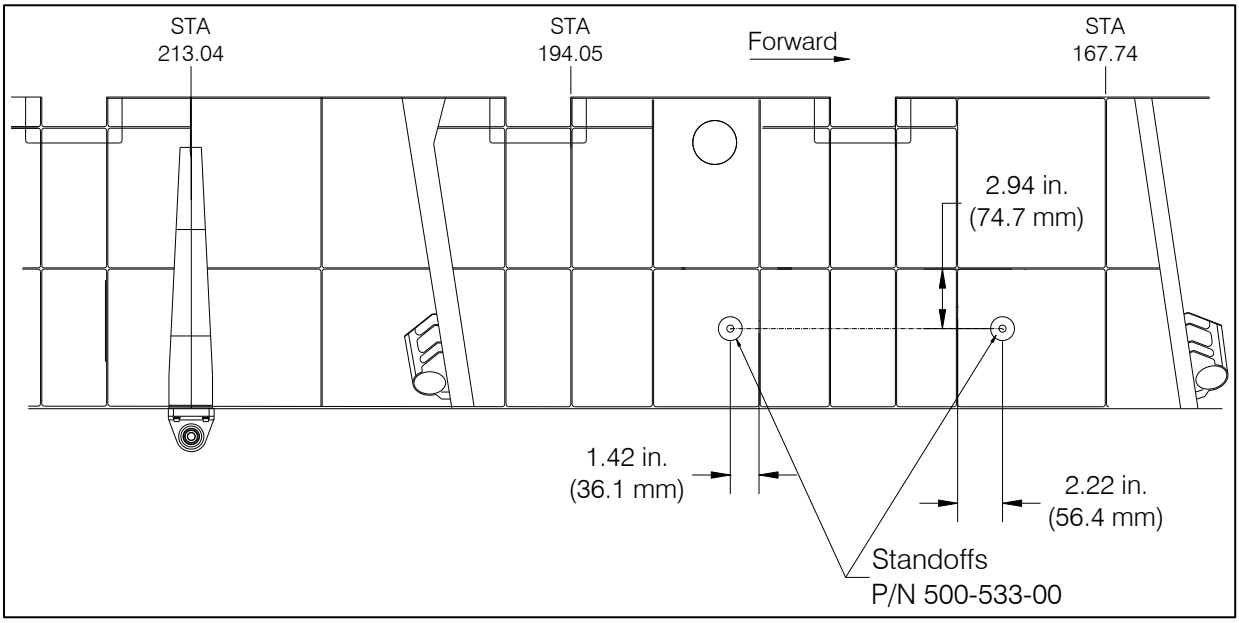

This document is proprietary to Onboard Systems Int'l. Disclosure or reproduction is not allowed. © 2025 Onboard Systems Int'l., all rights reserved.

13. For S/N 57081 and subsequent install a standoff at the mid-quarter frame per the following.
    - Using a non-permanent marker, mark the location of the standoff (P/N 500-532-00) per Figure 3.27.
    - Install the standoff with the supplied adhesive kits (P/N 520-147-00).

Figure 3.27 Standoff at Mid-quarter Frame (S/N 57081 and Subs)

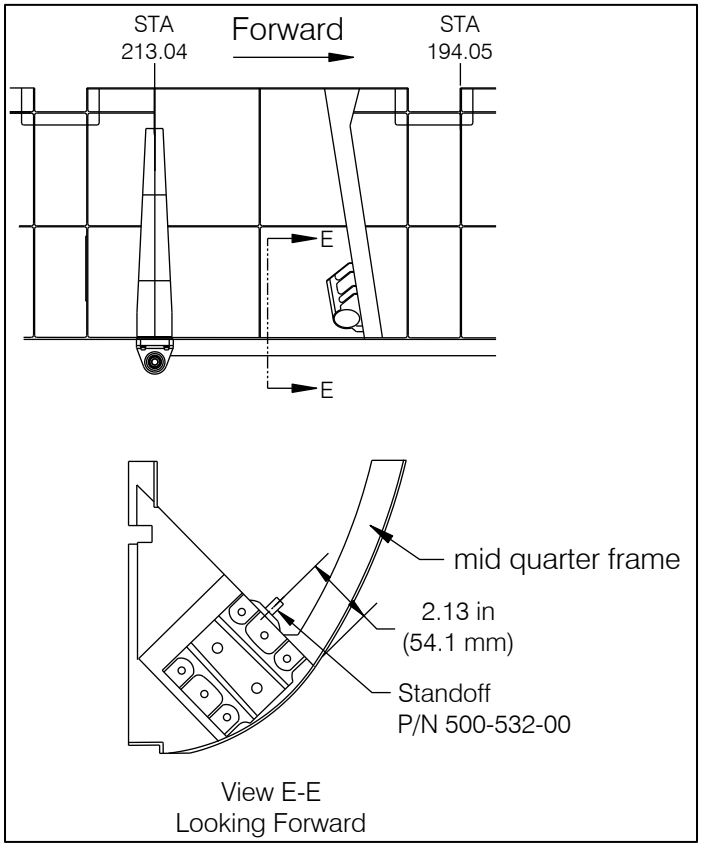

14. Install a right-angle standoff (P/N 500-531-00) on the keel beam stiffener just forward of the RH forward keel beam fittings per the dimensions in Figure 3.28. Install the standoff using the supplied adhesive kits (P/N 520-147-00).

This document is proprietary to Onboard Systems Int'l. Disclosure or reproduction is not allowed. © 2025 Onboard Systems Int'l., all rights reserved.

Figure 3.28 Hose Support Fwd of Keel Beam Fitting

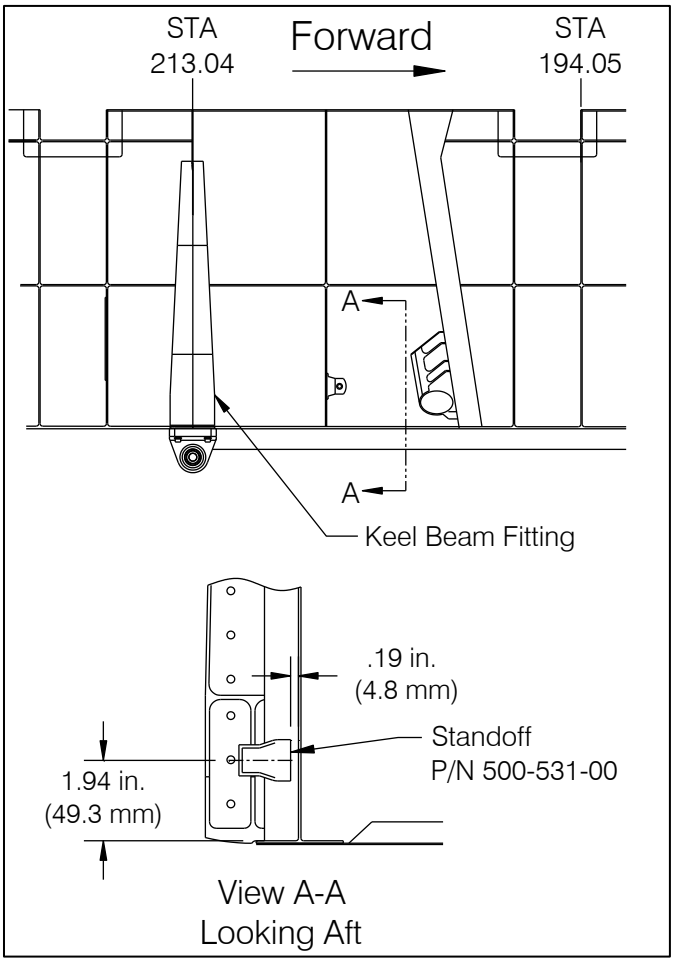

To support the wire harnesses, install a standoff on the RH keel beam fitting and on the RH keel beam per the following.

15. Using a non-permanent marker, mark the location on the RH keel beam per the dimensions shown in Figure 3.29.
16. Install the Standoff P/N 500-533-00 with adhesive (P/N 520-147-00).
17. Position a standoff (P/N 500-528-00) on the RH forward keel beam fitting at a dimension as shown in Figure 3.29.
18. Using the standoff as a template, drill two Ø0.098 inch (2.49 mm) holes through the flange of the keel beam fitting with a no. 40 drill. Deburr the holes.
19. Install the standoff on the keel beam fitting with two rivets.

This document is proprietary to Onboard Systems Int'l. Disclosure or reproduction is not allowed. © 2025 Onboard Systems Int'l., all rights reserved.

Figure 3.29 Standoffs at Keel Beam Fitting and Keel Beam

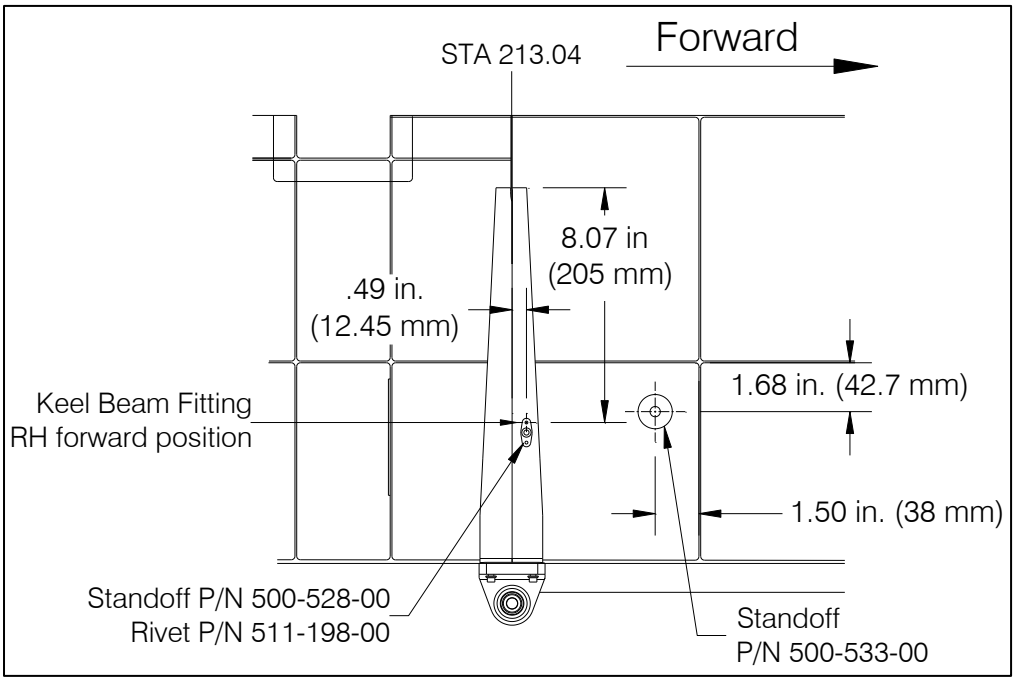

This document is proprietary to Onboard Systems Int'l. Disclosure or reproduction is not allowed. © 2025 Onboard Systems Int'l., all rights reserved.

3.3.6 Create Holes for Routing Hoses and Harnesses

Create Ø0.75" (19 mm) holes in the structure for routing the hydraulic hose through the structure per the following.

1. At the pedestal beam, drill a Ø0.75" (19 mm) hole at the location shown in Figure 3.30. Deburr the hole and touch up with primer as necessary.

Figure 3.30 Hole in Pedestal Beam

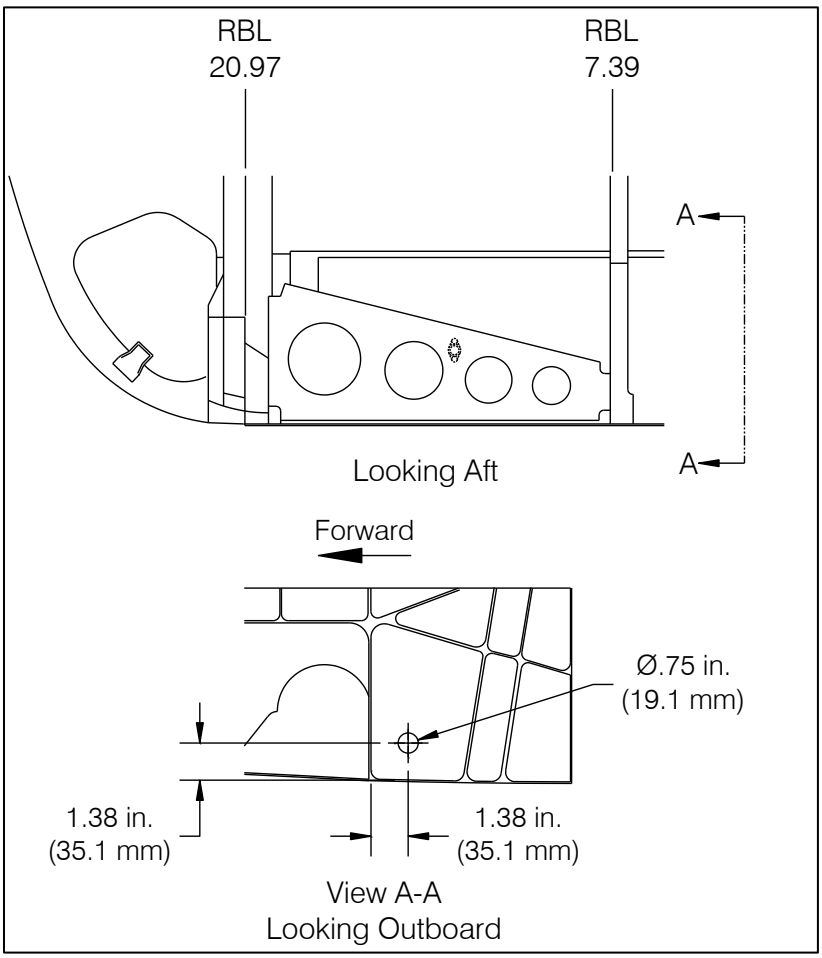

2. At the RH keel beam, drill a Ø0.75" (19 mm) hole at the location shown in Figure 3.31. Deburr the hole and touch up with primer as necessary.

This document is proprietary to Onboard Systems Int'l. Disclosure or reproduction is not allowed. © 2025 Onboard Systems Int'l., all rights reserved.

Figure 3.31 Hole in RH Keel Beam

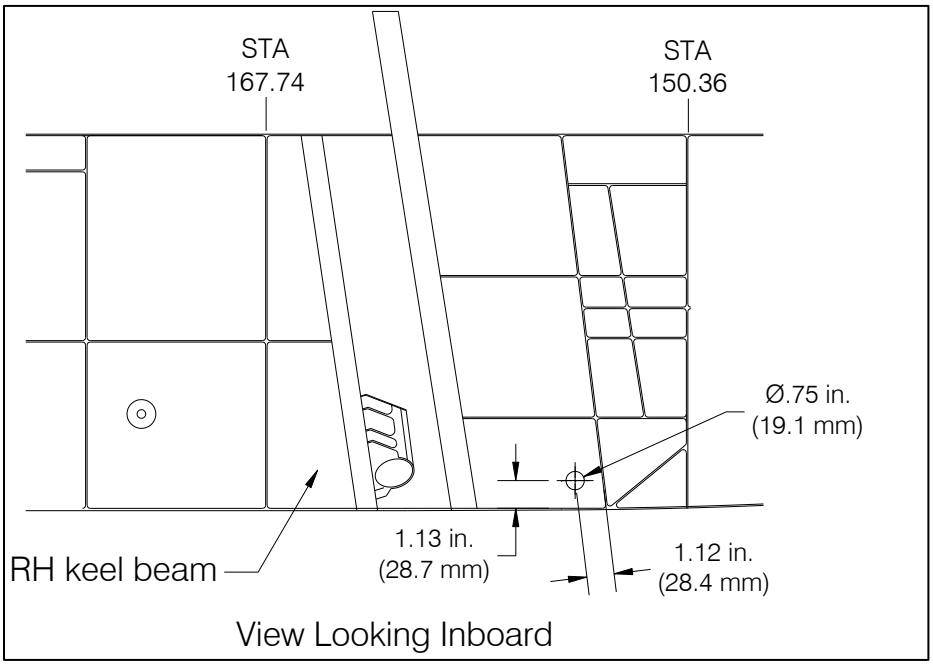

3. Forward of the forward RH external hardpoint fitting, create a 0.75" (19 mm) wide slot in the side-body panel at the location and with the dimensions shown in Figure 3.32. If the Bell dual cargo hook fixed provisions kit was installed previously, this slot is created by removing the material between the two Ø0.75" (19 mm) holes that are existing.
4. Install the oval grommet (P/N 505-029-00) within the slot.

Figure 3.32 Slot in Side-body Panel

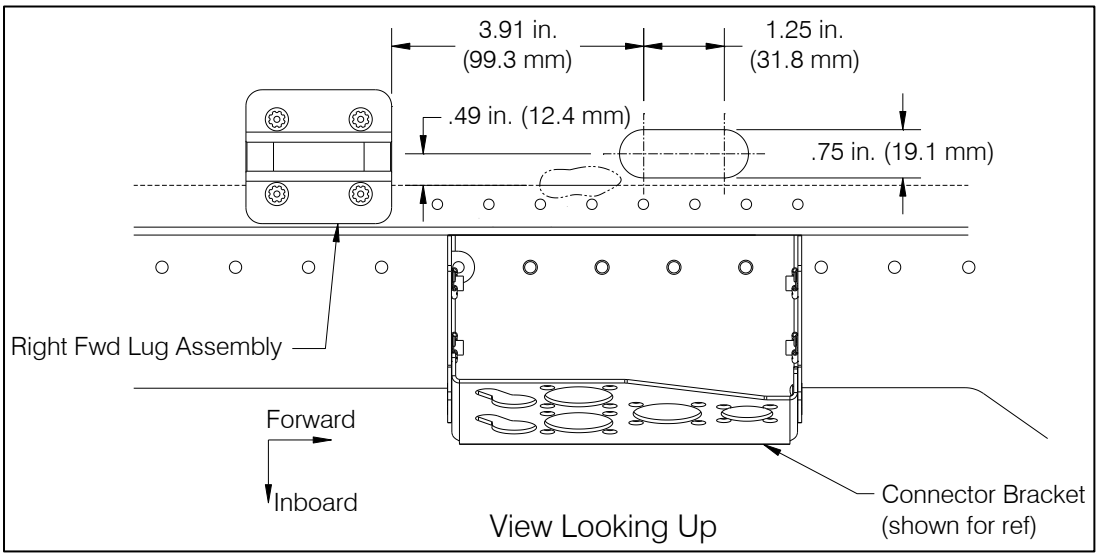

This document is proprietary to Onboard Systems Int'l. Disclosure or reproduction is not allowed. © 2025 Onboard Systems Int'l., all rights reserved.

3.4 Fixed Hydraulic Release System Installation

Route the master cylinder plumbing assemblies and install the dual master cylinder on the collective per the instructions in this section.

Dual Master Cylinder P/N 232-876-01 is included with Fixed Provisions Kit P/Ns 200-485-01 and 200-485-03 for RH PIC configuration. Dual Master Cylinder P/N 232-876-00 is included with Fixed Provisions Kit P/Ns 200-485-00 and 200-485-02 for LH PIC configuration.

Routing can be done from starting from connector bracket and routing forward or starting from the collective and routing aft. If routing from the connector bracket separate both master cylinder plumbing assemblies (also referred to as hydraulic hoses) from the Dual Master Cylinder Assembly by removing the two banjo bolts as shown below or if routing from the collective aft remove the quick disconnect fittings from the opposite end of the hydraulic hoses. Use a piece of masking tape or other means to cover the openings into the dual master cylinder and the banjo fittings at the end of the hoses to prevent FOD intrusion.

Figure 3.33 Hose Disassembly for Routing

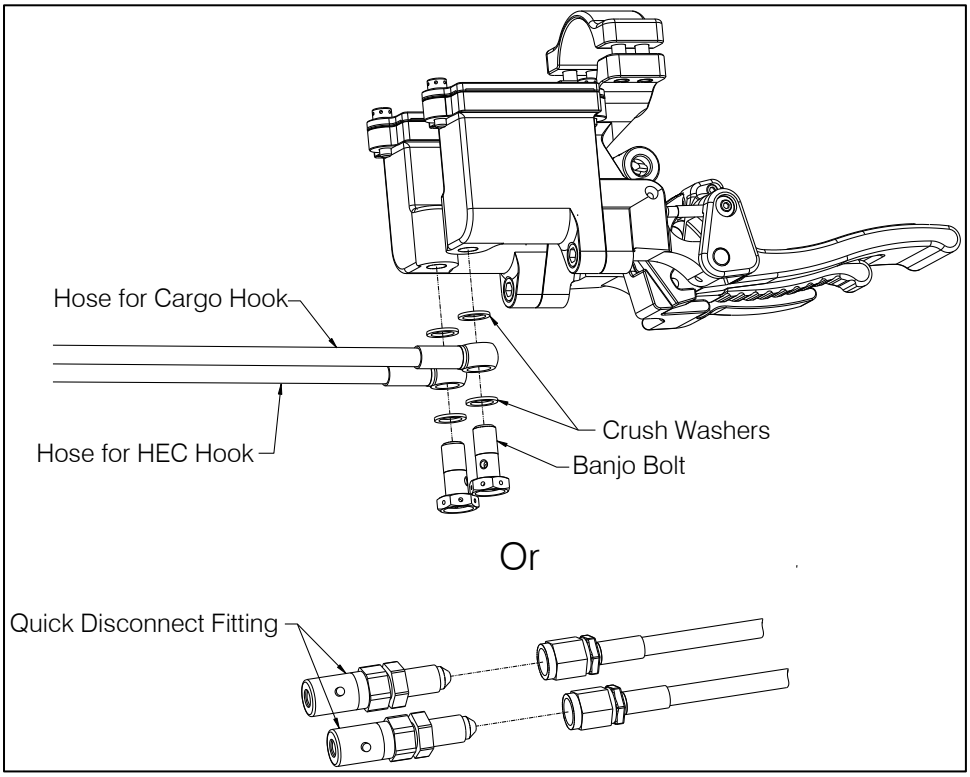

This document is proprietary to Onboard Systems Int'l. Disclosure or reproduction is not allowed. © 2025 Onboard Systems Int'l., all rights reserved.

CAUTION

Use best shop practices to keep foreign material out of the hydraulic system. FOD will plug orifices, damage seals and/or scratch sealing surfaces necessitating system rebuild.

1. If starting at the aft end (near the Connector Bracket), route the ends of the hydraulic hoses with the banjo fittings up through the Ø0.75" wide slot in the side-body panel and then forward along the outboard side of the RH keel beam.

   Alternatively, if starting at the collective route the hoses through the opening at the base of the collective and down through the airframe.

2. For S/N 57081 and subsequent: at the standoff installed at the mid quarter frame, position a loop clamp (P/N 512-070-00) over each hose and lightly secure the loop clamps to the standoff with screw P/N 510-644-00 and washer P/N 510-419-00.

   Do not tighten the screws until the hoses are fully routed to the collective.

   Figure 3.34 Loop Clamps at Mid Quarter Frame

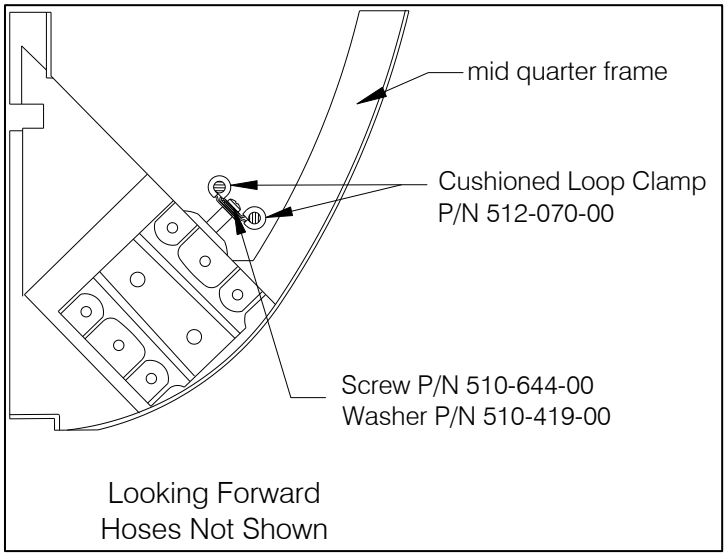

3. For S/Ns 57000 – 57080 and optional for S/N 57081 and subs.: attach Bracket P/N 512-028-00 to the right-angle standoff with hardware as shown in Figure 3.35. Rotate the Bracket (approximately as shown) so that the hoses are directed into the aft end of the slot.

This document is proprietary to Onboard Systems Int'l. Disclosure or reproduction is not allowed. © 2025 Onboard Systems Int'l., all rights reserved.

Attach the two cushioned loop clamps (P/N 512-070-00) to the Bracket with screw P/N 510-644-00, washer P/N 510-419-00, and nut P/N 510-478-00.

Figure 3.35 Hose Attachment Above Connector Bracket

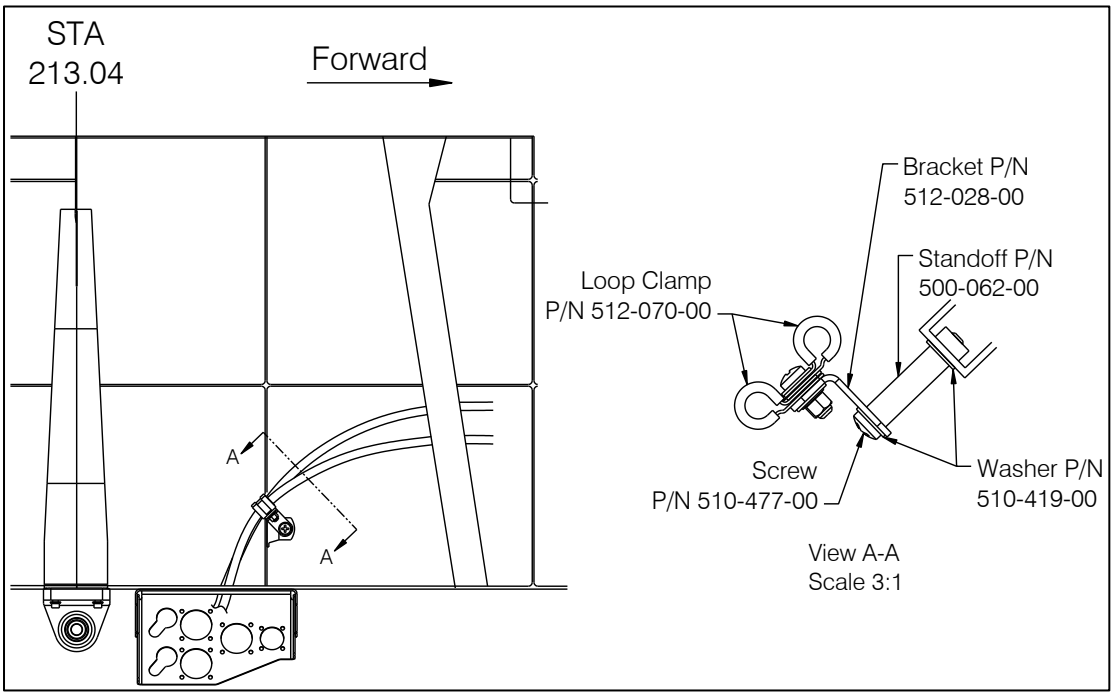

4. At the standoffs on the keel beam, position a cushioned loop clamp (P/N 512-070-00) over each hose and lightly secure the loop clamps to the standoff with screw P/N 510-644-00 and washer P/N 510-419-00.

Figure 3.36 Hose Routing Along Keel Beam (S/N 57000 – 57080)

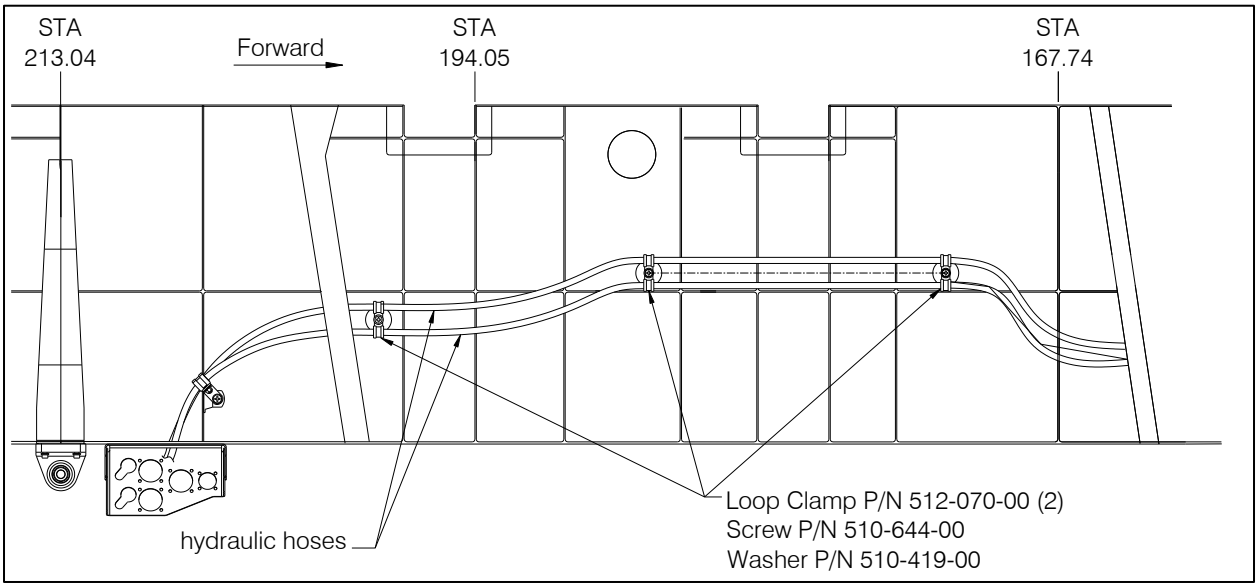

This document is proprietary to Onboard Systems Int'l. Disclosure or reproduction is not allowed. © 2025 Onboard Systems Int'l., all rights reserved.

Figure 3.37 Hose Routing Along Keel Beam (S/N 57081 and subs.)

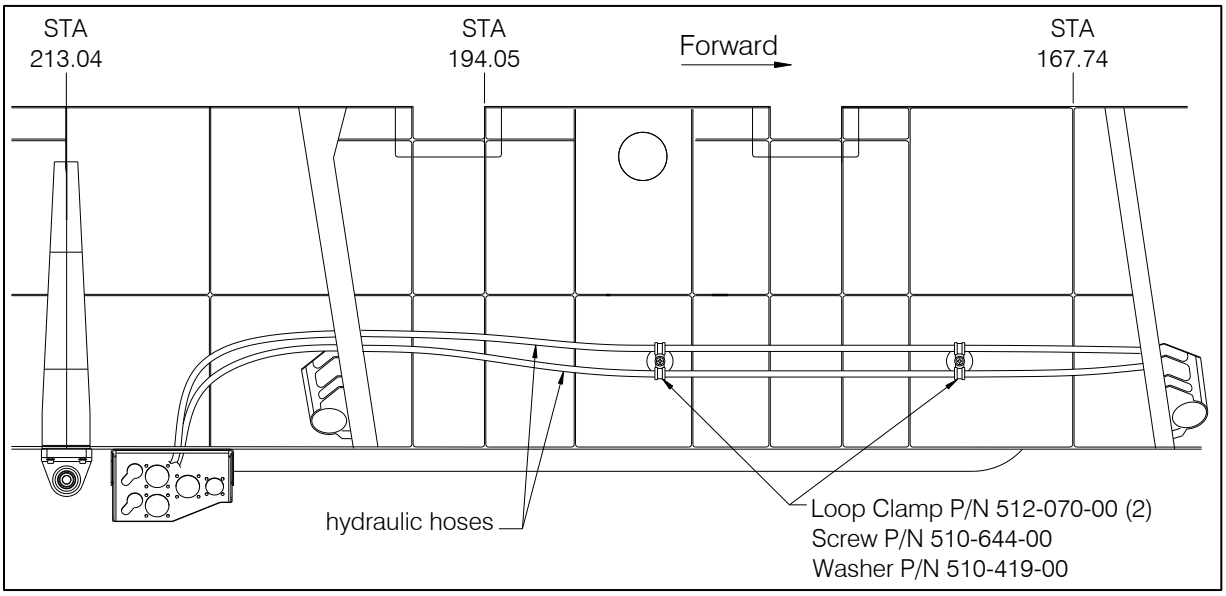

5. At the standoff installed at the forward quarter frame (ref. Figure 3.38), position a loop clamp (P/N 512-070-00) over each hose and secure the loop clamps to the standoff with screw P/N 510-644-00 and washer P/N 510-419-00.
6. Route the hoses inboard through the 0.75" hole in the keel beam created previously (ref. Figure 3.38).

This document is proprietary to Onboard Systems Int'l. Disclosure or reproduction is not allowed. © 2025 Onboard Systems Int'l., all rights reserved.

Figure 3.38 Hose Routing at Forward Quarter Frame

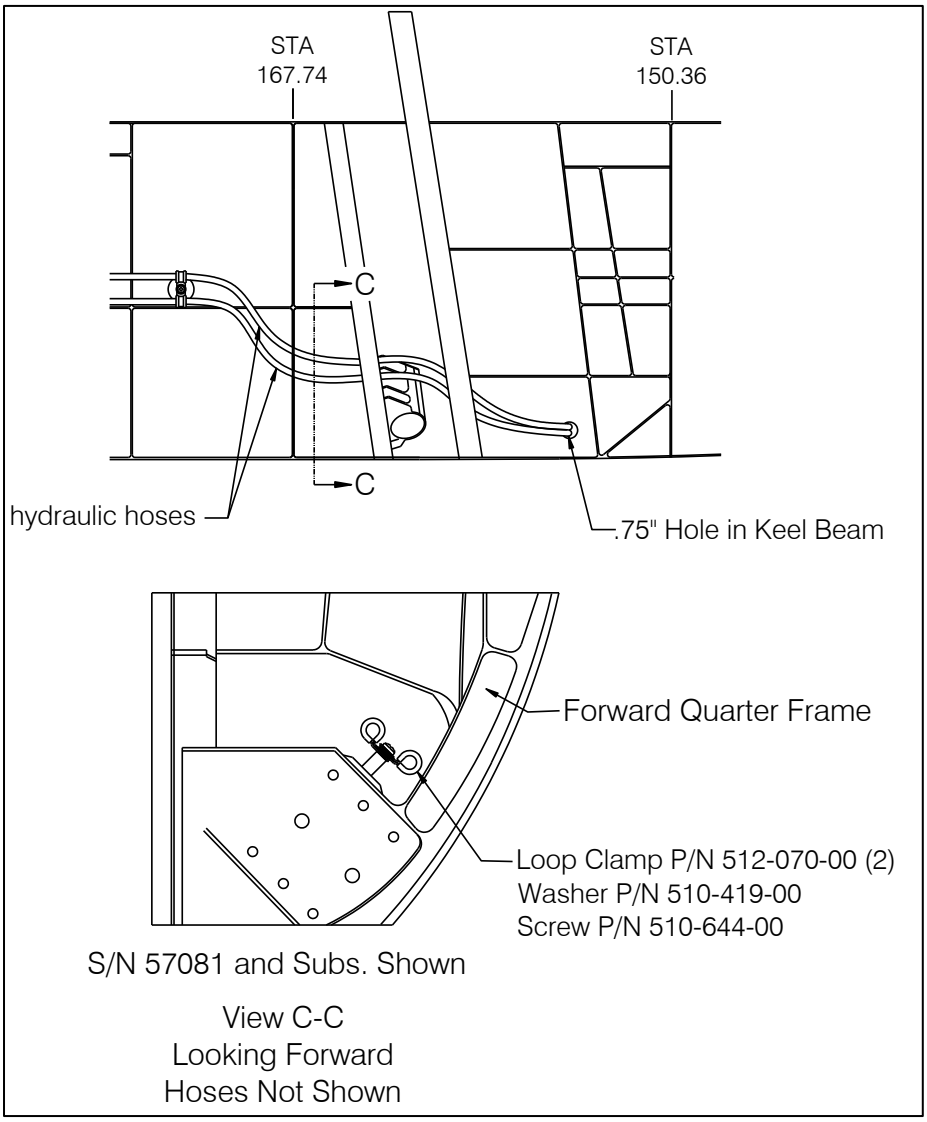

7. Insert grommet P/N 505-028-00 in the hole, around the hoses.

This document is proprietary to Onboard Systems Int'l. Disclosure or reproduction is not allowed. © 2025 Onboard Systems Int'l., all rights reserved.

8. At the standoff installed on the aft side of the lateral frame, place a loop clamp (P/N 512-070-00) over each hose and lightly secure the loop clamps to the standoff with screw P/N 510-644-00 and washer P/N 510-419-00.

Figure 3.39 Loop Clamps at RH Intercostal

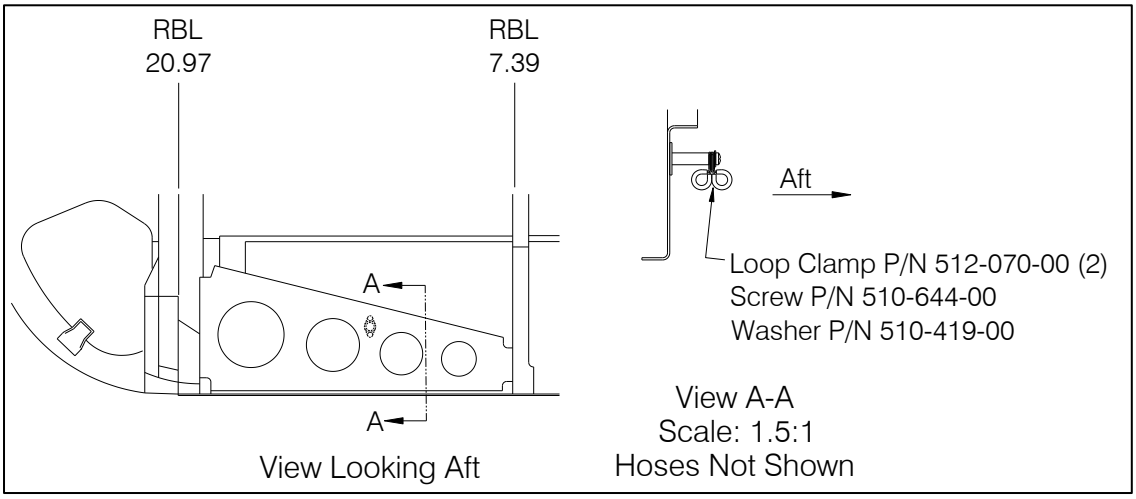

9. Route the hoses inboard through the Ø0.75" hole created in the pedestal beam.

10. Insert a grommet (P/N 505-028-00) in the Ø 0.75" hole, around the hoses.

11. At the aft end of the hoses, re-attach the quick disconnect fittings to the hoses (if they were removed for routing). Tighten the quick disconnect fittings to 70-90 in-lb.

12. Attach the quick disconnect fittings of each hose (attach HEC hose to the lower hole) to the Connector Bracket on the belly by inserting through keyhole slot and sliding to the narrow end of the slot. Tighten the panel nuts on the inside of the bracket to 70-90 in-lb.

Figure 3.40 Disconnect Fitting Locations

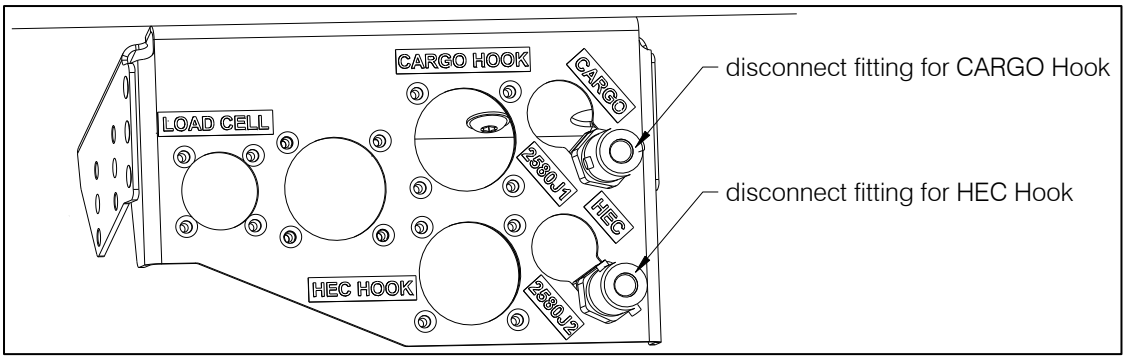

This document is proprietary to Onboard Systems Int'l. Disclosure or reproduction is not allowed. © 2025 Onboard Systems Int'l., all rights reserved.

For LH PIC continue routing the hoses per the following steps, if installation is for RH PIC skip to section 3.4.1.

13. Route the hoses through the center pedestal area and to the forward side of the intercostal (just aft of the skid gear tube).
14. Position loop clamps over each hose at the locations shown below and loosely secure to the standoffs installed previously on the forward end of pedestal beam, intercostal, and the forward end of keel beam.

Figure 3.41 Loop Clamps/Cable Tie at LH Side Intercostal and Beams

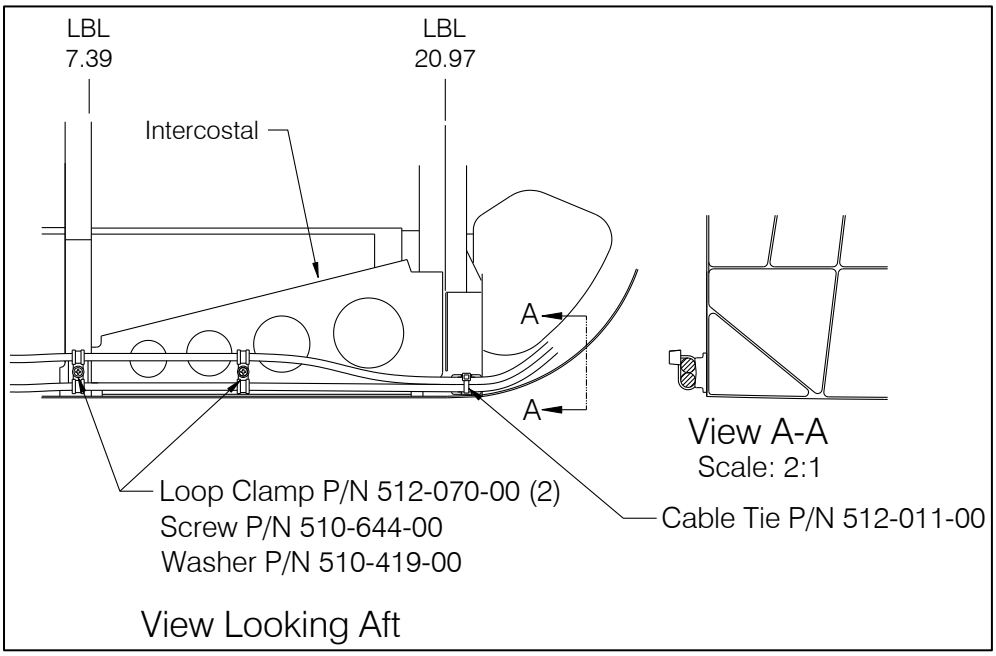

This document is proprietary to Onboard Systems Int'l. Disclosure or reproduction is not allowed. © 2025 Onboard Systems Int'l., all rights reserved.

15. Route the hoses to the standoff installed on the inside of belly panel and loosely secure them with loop clamps, screw and washer as shown in figure below.

Figure 3.42 Hose Attachment – Inside LH Panel

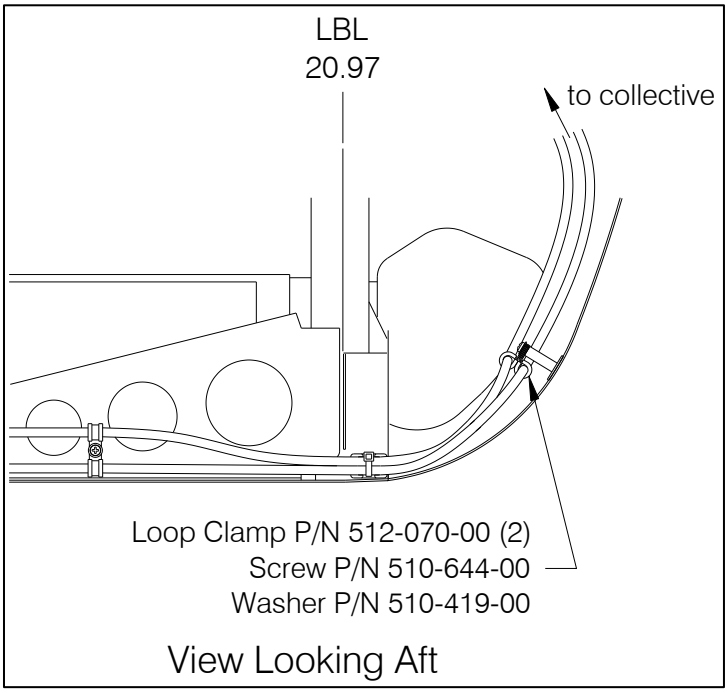

This document is proprietary to Onboard Systems Int'l. Disclosure or reproduction is not allowed. © 2025 Onboard Systems Int'l., all rights reserved.

3.4.1 Installation at Collective

This section describes the installation of the Master Cylinder on the collective. Skip steps 1 – 3 if the hoses were not separated from the Master Cylinder for routing.

1. Route the two hoses up through the hole in the floor for the collective.
2. Attach the banjo fitting of each of the hoses to the Dual Master Cylinder Assembly. Attach the HEC Hook hose to the left side threaded hole of the dual master cylinder assembly and the CARGO Hook hose to the right-side threaded hole (as shown below).

Figure 3.43 Hose Attachment to Master Cylinder

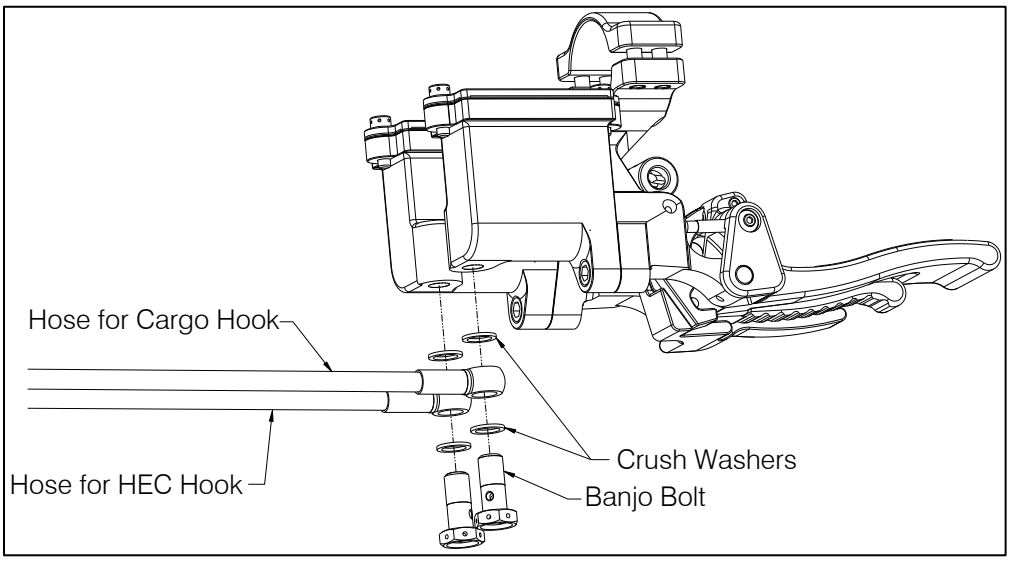

3. Torque the banjo bolts to 10-11 ft-lb.
4. Remove the four hex head screws that temporarily secure the upper Clamp to the Master Cylinder.
5. Position the Dual Master Cylinder on the collective at the location shown below, verify it does not cover the throttle instructions lettering on the collective. Re-install the four screws, tighten the screws just enough to hold the Dual Master Cylinder in position.

This document is proprietary to Onboard Systems Int'l. Disclosure or reproduction is not allowed. © 2025 Onboard Systems Int'l., all rights reserved.

Figure 3.44 Dual Master Cylinder Positioning

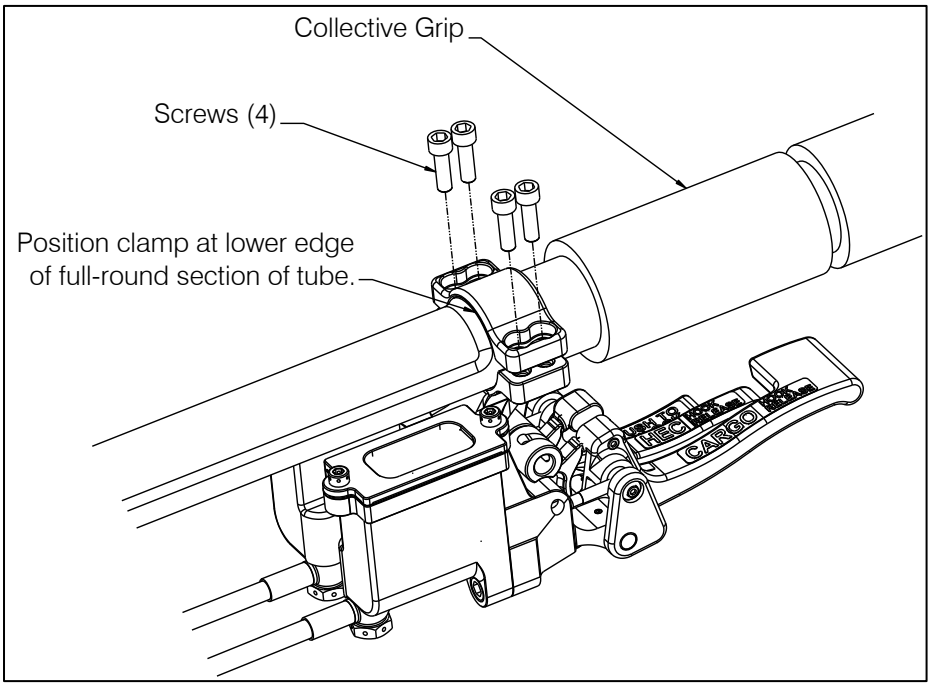

6. Secure the hoses near the base of the collective with a loop clamp (P/N 512-069-00) around the collective tube and a loop clamp P/N 512-076-00 around each hose. Secure the loop clamps together with screw with hardware as shown below.

Figure 3.45 Securing Hoses to Collective Shaft

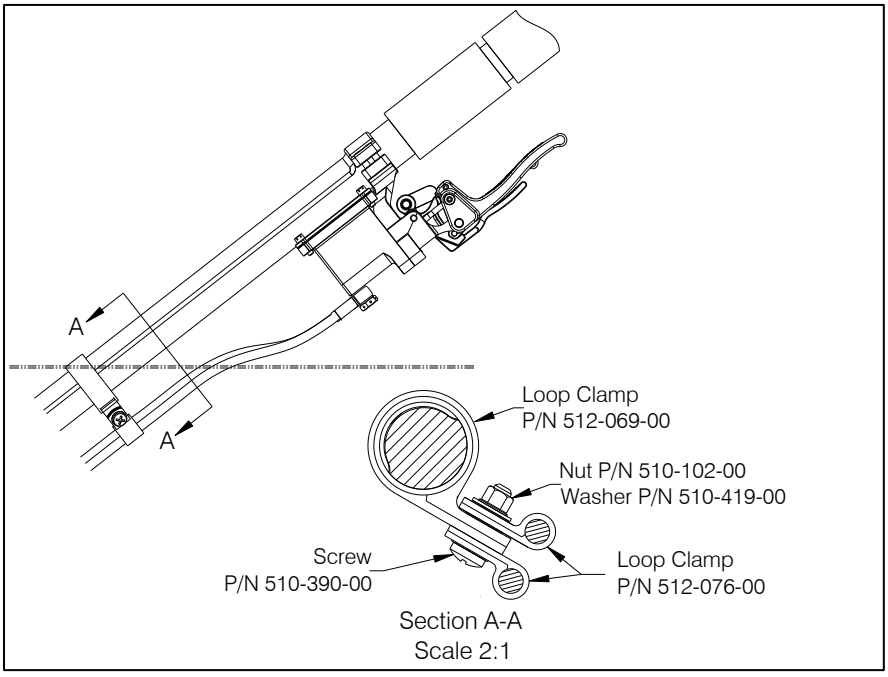

This document is proprietary to Onboard Systems Int'l. Disclosure or reproduction is not allowed. © 2025 Onboard Systems Int'l., all rights reserved.

7. Re-install the collective boot down over the collective and dual master cylinder assembly and route the hoses through it.
8. At this point the hoses are fully routed, review the routing along its length and adjust as needed to position any slack into an area where there is space to accommodate it. Ensure there is sufficient slack to the collective so that movement of the collective is not restricted.

⚠ CAUTION

Provide enough slack up to the loop clamps on the collective to ensure full movement of the collective is not restrained.

⚠ CAUTION

Verify hoses are secured clear of and cannot be deflected into flight controls.

9. For the LH PIC, at the loop clamps below the collective adjust their angle to provide optimal routing up to the collective.
10. Tighten all screws securing the loop clamps along the hose routing.

This document is proprietary to Onboard Systems Int'l. Disclosure or reproduction is not allowed. © 2025 Onboard Systems Int'l., all rights reserved.

3.5 Fixed Cargo Release Electrical Wiring Installation

This section provides instructions for installing the internal electrical harnesses for the primary cargo hook and secondary cargo hook release systems.

If installing a **P/N 200-493 series retrofit kit** for retrofitting a Bell 429 that is equipped with the Bell Dual Cargo Hook System, the existing wiring as installed per the Bell type certificate is compatible and this section is NOT applicable.

If installing a **P/N 200-494 series retrofit kit** for retrofitting a Bell 429 that is equipped with the Bell Single Cargo Hook System, the existing wiring for the existing NHEC cargo hook as installed per the Bell type certificate is not compatible. Remove this wiring as necessary to complete the wiring installation per this section.

Refer to Section 12.0 for the complete cargo release system schematic.

Route the wires along the existing harnesses per the following guidance.

- Pick up existing wire runs by opening existing cable clamps. Nylon ties alone may not be used for primary support.
- The distance between supports should not exceed 21 inches (53 cm).
- Bend radius of wire or harness must not be less than 10 times the wire or harness diameter.
- Inspect and verify that the wire harness may not be manually deflected into a structure with a bend radius of less than 0.13 inches (3.3 mm).

3.6 Connector Modification Procedure

Many of the wires for the cargo hooks' electrical release systems and the load weigh system are routed between existing connectors on the aircraft. Each of these existing connectors is to be disassembled as necessary and re-assembled per the following instructions. If the wires can be inserted through without removing the sleeving and support ring, then these items do not need to be removed.

1. As necessary, cut and remove the identification sleeving and remove the insulation sleeving over the shield support ring. This is not necessary if the wires can be inserted through to the back of the connector without removing these items. If the wires can be inserted through, skip to step 3.
2. Remove the band over the shield support ring, retract the braid sock, and remove the shield support ring. Discard the band and shield support ring.
3. Remove the adapter from the connector.
4. Crimp contact(s) on the end of wire(s) and insert into connector as specified. Extra contacts are included to account for loss or "mis-crimp".

This document is proprietary to Onboard Systems Int'l. Disclosure or reproduction is not allowed. © 2025 Onboard Systems Int'l., all rights reserved.

5. Wrap 1½ to 2 turns of adhesive tape between the wire bundle and the braid sock for protection against chafing.
6. Re-assemble the adapter onto the connector.
7. Wrap insulation tape as needed to build up the bundle diameter for the adapter clamp.
8. As necessary, install a new shield support ring.
9. As necessary, attach the shield terminations and leads to the new shield support ring with the supplied band.
10. If the identification sleeving was removed, replace it with the applicable label within the provided Harness Label Kit (P/N 215-471-00), see below for example. Secure the applicable label to the wire bundle with two of the provided cable ties (P/N 512-003-00).

Figure 3.46 Connector Label

3.7 Cargo Release Electrical Wiring Installation

3.7.1 Wire from 3140A1P1 to 4296P22

Internal Harness Kit P/N 210-333-00 includes wire number HEC-007L22. This wire is located in the bag labeled "NOSE/SIDEBODY BREAK AND AFT SECTION BREAK".

HEC-007L22 is routed from the connector no. 3140A1P1 at the Aircraft Data Interface Unit (ADIU) to connector no. 4296P22 at the aft lift frame.

This document is proprietary to Onboard Systems Int'l. Disclosure or reproduction is not allowed. © 2025 Onboard Systems Int'l., all rights reserved.

Figure 3.47 Schematic – 3140A1P1 to 4296P22

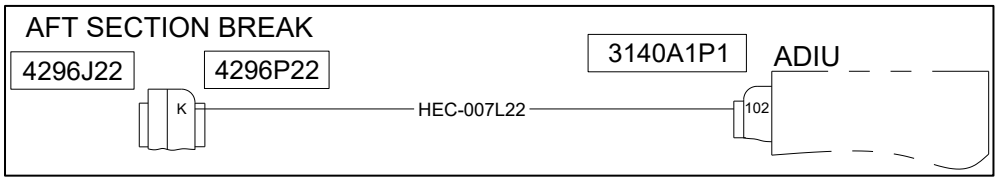

1. Disassemble connector 3140A1P1 per section 3.6.
2. Crimp on contact P/N 410-370-00 (M39029/56-348).
3. Insert wire HEC-007L22 per the table below. Use an M81969/14-01 Insertion/Removal Tool or similar.

Wire No.	Connector/Pin
HEC-007L22	3140A1P1 / pin 102

4. Re-assemble per section 3.6 using Shield Support Ring P/N 410-492-00 and Band P/N 512-036-00 (alternate: Bell P/N 20-108-1).
5. Route wire HEC-007L24 to connector 4296P22 with existing wires and trim to length as needed after verification of adequate length for terminating the wire at 4296P22.
6. Disassemble connector 4296P22 per section 3.6.
7. Crimp on contact P/N 410-314-00 (M39029/58-363). Use an M22520/1-04 turret head and positioner with an M22520/1-01 basic tool.
8. Insert wire HEC-007L22 per the table below. Use an M81969/14-10 Insertion/Removal Tool or similar.

Wire No.	To Connector/pin
HEC-007L22	4296P22 / pin K

9. Re-assemble per section 3.6 using Shield Support Ring P/N 410-494-00 and Band P/N 512-036-00 (alternate: Bell P/N 20-108-1).

3.7.2 Wire from 4296J22 to 4296P8

Internal Harness Kit P/N 210-333-00 includes wire HEC-007K22. This wire is in the bag labeled "NOSE/SIDEBODY BREAK AND AFT SECTION BREAK".

HEC-007K22 is connected to receptacle no. **4296J22** and routed to connector no. **4296P8**.

This document is proprietary to Onboard Systems Int'l. Disclosure or reproduction is not allowed. © 2025 Onboard Systems Int'l., all rights reserved.

Figure 3.48 Schematic – 4296J22 to 4296P8

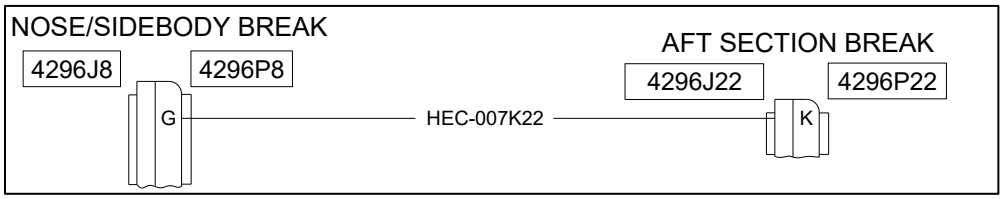

1. Remove the receptacle 4296J22 from its mounting plate, retain mounting hardware.
2. Disassemble per Section 3.6.
3. Crimp on contact P/N 410-495-00 (M39029/56-351). Use an M22520/1-04 turret head with an M22520/1-01 basic tool.
4. Insert wire HEC-007K22 per the table below.

Wire No.	To Connector/pin
HEC-007K22	4296J22 / pin K

5. Re-assemble per section 3.6 using Shield Support Ring P/N 410-492-00 and Band P/N 512-036-00 (alternate: Bell P/N 20-108-1).
6. Route wire HEC-007K22 to connector 4296P8 in the next section with the wires of harness P/N 270-247-00 and 270-248-00. This wire will be terminated later at 4296P8.

3.7.3 Harness P/Ns 270-247-00, 270-248-00 and Wires to 4296P8

In this section, the two receptacles of the harnesses (P/Ns 270-247-00 and 270-248-00) are attached to the Connector Bracket and wires from these connectors are routed to 4296P8 and ground 2580GC1 and 2580GC2.

Figure 3.49 Schematic for 270-247-00 and 270-248-00

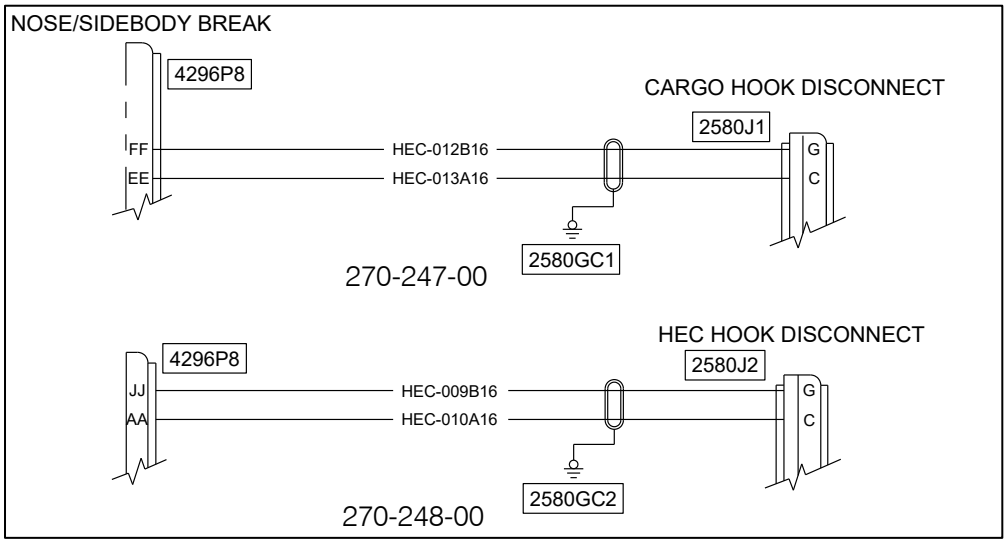

This document is proprietary to Onboard Systems Int'l. Disclosure or reproduction is not allowed. © 2025 Onboard Systems Int'l., all rights reserved.

Harness P/N 270-247-00 is for the primary **CARGO** Hook and its receptacle is labeled **2580J1**. Harness P/N 270-248-00 is for the secondary **HEC** Hook and its receptacle is labeled **2580J2**.

1. Prep the mating surfaces of the two receptacles and connector bracket for Bell Class R-I electrical bonding requirements (per BHT-ELEC-SPM, Chapter 8).
2. In preparation for securing the receptacles to the bracket, apply sealant to the underside of the countersunk head of the eight (8) screws (P/N 510-700-00), do not apply to threads.
3. Attach each receptacle to the Connector Bracket (at positions shown below) with four screws and a Perimeter Nut Plate (P/N 511-269-00) at each receptacle.

Figure 3.50 Connector Locations

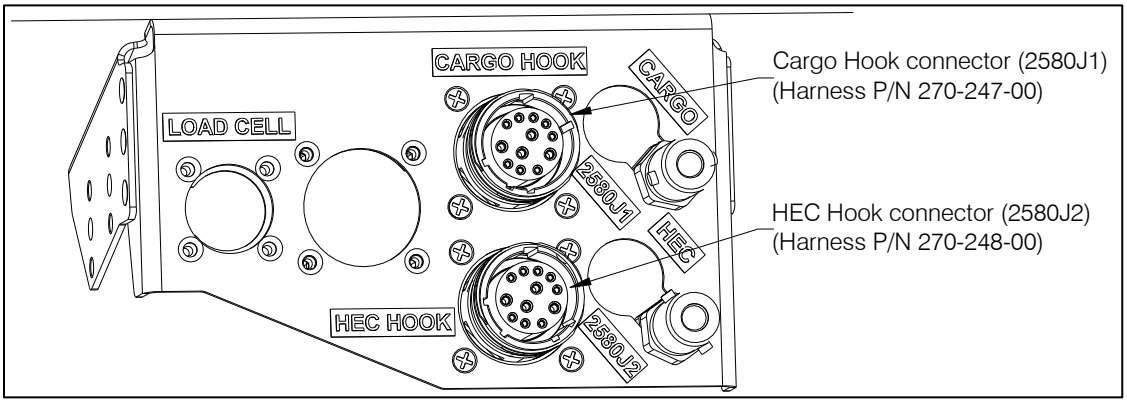

4. Verify the electrical bonding between the receptacles and the Connector Bracket meets Bell Class R-I requirements.
5. Seal the perimeter of both sides of each receptacle to seal the electrical bonding areas.
6. If not installed, install the "CARGO HOOK", "HEC HOOK", "2580J1" and "2580J2" decals on the connector bracket, adjacent to the respective connector (as shown in Figure 3.50).

Route wires from the receptacles through the 0.75" wide slot created in the side-body panel per the following.

7. Gather wires HEC-009B16, HEC-010A16, and HEC-019A16N from 2580J2 receptacle and wires HEC-012B16, HEC-013A16, and HEC-020A16N from 2580J1 receptacle.
8. Feed these wires through the 0.75" wide slot.

This document is proprietary to Onboard Systems Int'l. Disclosure or reproduction is not allowed. © 2025 Onboard Systems Int'l., all rights reserved.

NOTICE

As applicable remove and discard existing cable ties on all clamps and harnesses. Use replacement cable tie (512-029-00) as needed during routing of the cargo hook wires. Do not cinch up cable ties until all wires are routed through.

For the following steps refer to Figure 3.51

9. Route four wires HEC-009B16, HEC-010A16, HEC-012B16, and HEC-013A16 forward along the keel beam to connector 4296P8.
10. Secure these four wires to the standoff installed previously with cushioned loop clamp (P/N 512-010-00), washer (P/N 510-419-00) and screw (P/N 510-644-00).
11. Route wires HEC-019A16N and HEC-020A16N aft to the Ground Plate installed previously.
12. Route these two ground wires through a Cushioned Loop Clamp (P/N 512-024-00) secured with screw (P/N 510-644-00) and washer (P/N 510-419-00) to the standoff on the forward keel beam fitting.
13. Trim the two wires to length to terminate at the lower two holes of Ground Plate, prep the ends, and crimp a Ring Terminal (P/N 410-258-00) on each one.

The mating surfaces for the two ground studs 2580GC2 and 2580GC1 on the Ground Plate are provided prepped for electrical bonding. If the optional load weigh system is being installed, its shield ground will also be terminated here so one of these ground stud nuts can be loosely secured until load weigh ground wire is routed.

14. Secure the ring terminal of wire HEC-019A16N to the lowest of the four holes on the Ground Plate with hardware as shown below. This is ground stud 2580GC2.
15. Secure the ring terminal of wire HEC-020A16N to the 2nd from the bottom hole on the Ground Plate with the same hardware as shown above. This is ground stud 2580GC1.

This document is proprietary to Onboard Systems Int'l. Disclosure or reproduction is not allowed. © 2025 Onboard Systems Int'l., all rights reserved.

Figure 3.51 Cargo Hook and Load Weigh Ground 2580GC1 and 2580GC2

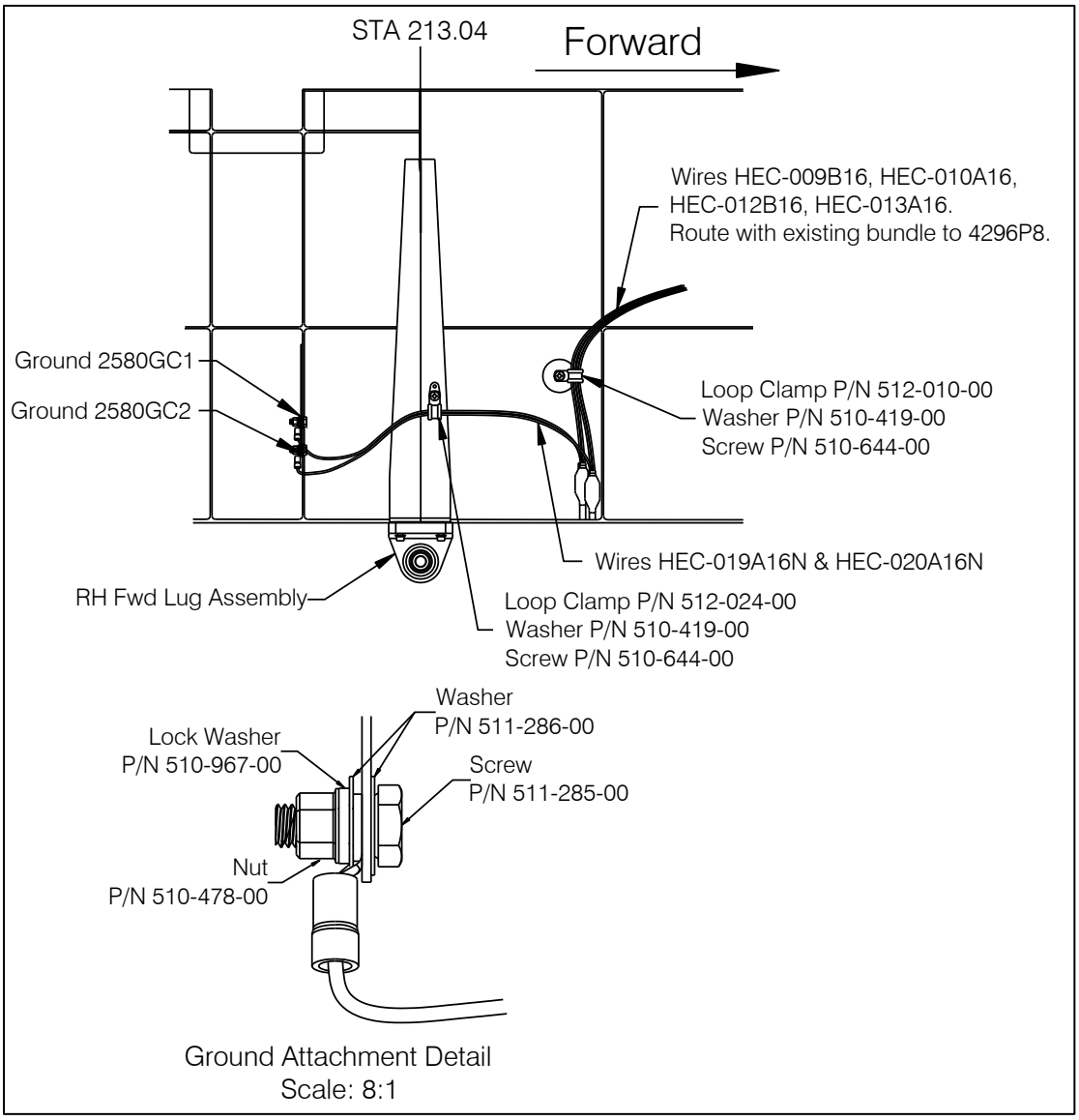

This document is proprietary to Onboard Systems Int'l. Disclosure or reproduction is not allowed. © 2025 Onboard Systems Int'l., all rights reserved.

Moving towards the front of the aircraft, the following steps are done at connector 4296P8 (to connect the wires from 2580J1 and 2580J2).

16. Disconnect the connector 4296P8 from the receptacle 4296J8.
17. Determine the required length of wires HEC-009B16, HEC-010A16, HEC-012B16, and HEC-013A16 to terminate at connector 4296P8 and trim to length.
18. Disassemble connector 4296P8 per section 3.6.
19. Crimp on contacts P/N 410-368-00 (M39029/58-364) at each of the four wires. Use an M22520/1-04 turret head and positioner with an M22520/1-01 basic tool.
20. Insert wires per the table below. Use an M81969/14-03 Insertion/Removal Tool or similar.

Wire No.	4296P8 Pin
HEC-009B16	JJ
HEC-010A16	AA
HEC-012B16	FF
HEC-013A16	EE

Leave the connector disassembled for the proceeding steps of connecting wires HEC-007C22, HEC-007F22, HEC-021G22, and HEC-022D22 of Internal Harness Kit P/N 210-333-00 to 4296P8. These wires are in the bag labeled "NOSE/SIDEBODY BREAK AND AFT SECTION BREAK".

The four wires listed above are terminated first at connector 4296P8 and then routed to 4296P34. Wire HEC-007K22 was routed from 4296J22.

Figure 3.52 Schematic – Wires from 4296P8 to 4296P34, 4296J22

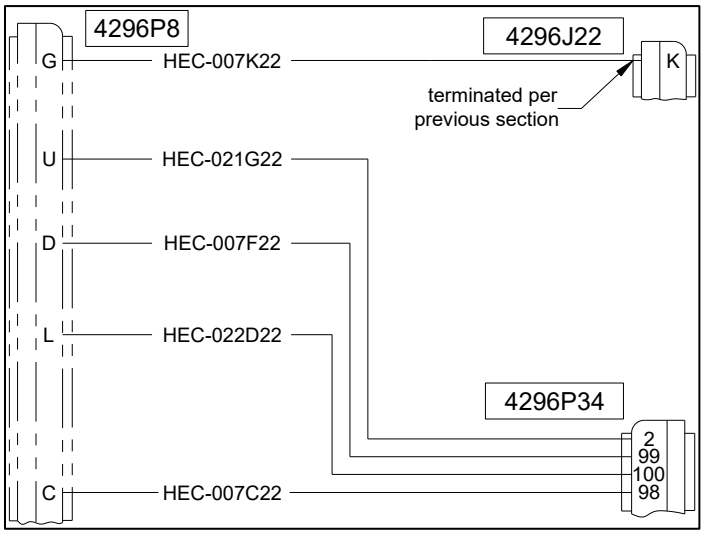

This document is proprietary to Onboard Systems Int'l. Disclosure or reproduction is not allowed. © 2025 Onboard Systems Int'l., all rights reserved.

1. Crimp on contacts P/N 410-314-00 (M39029/58-363) at each of these wires.
2. Insert wires into 4296P8 per the table below.

Wire No.	**4296P8 Pin**
HEC-007C22	C
HEC-007F22	D
HEC-007K22	G
HEC-021G22	U
HEC-022D22	L

3. Re-assemble connector 4296P8 per section 3.6 using Shield Support Ring P/N 410-497-00 and Band P/N 512-036-00 (alternate: Bell P/N 20-108-1).
4. Route wires HEC-007C22, HEC-007F22, HEC-021G22, and HEC-022D22 with the existing harnesses from connector 4296P8 to connector 4296P34.
5. Remove the connector 4296P34 from receptacle 4296J34.
6. Disassemble per Section 3.6.
7. Crimp on contact P/N 410-370-00 (M39029/56-348).
8. Insert wire per the table below. Use M81969/14-01 Insertion/Removal Tool or similar.

Wire No.	**4296P34 pin**
HEC-007C22	98
HEC-007F22	99
HEC-021G22	2
HEC-022D22	100

9. Re-assemble connector 4296P34 per section 3.6 using Shield Support Ring P/N 410-497-00 and Band P/N 512-036-00 (alternate: Bell P/N 20-108-1).

This document is proprietary to Onboard Systems Int'l. Disclosure or reproduction is not allowed. © 2025 Onboard Systems Int'l., all rights reserved.

3.7.4 Wires from 3930A5P2

Cargo Hook Internal Harness Kit P/N 210-333-00 includes wires HEC-007P22, HEC-007R22, HEC-021A22, and HEC-021C22 routed from connector 3930A5P2 to 2701J1 and 2702J1 and wire HEC-021F22 routed from receptacle 4296J34 to connector 3930A5P2. These wires are in the bag labeled "CENTER RELAY PANEL LCTN – UNDER SEAT".

Figure 3.53 Schematic for Wires from 3930A5P2

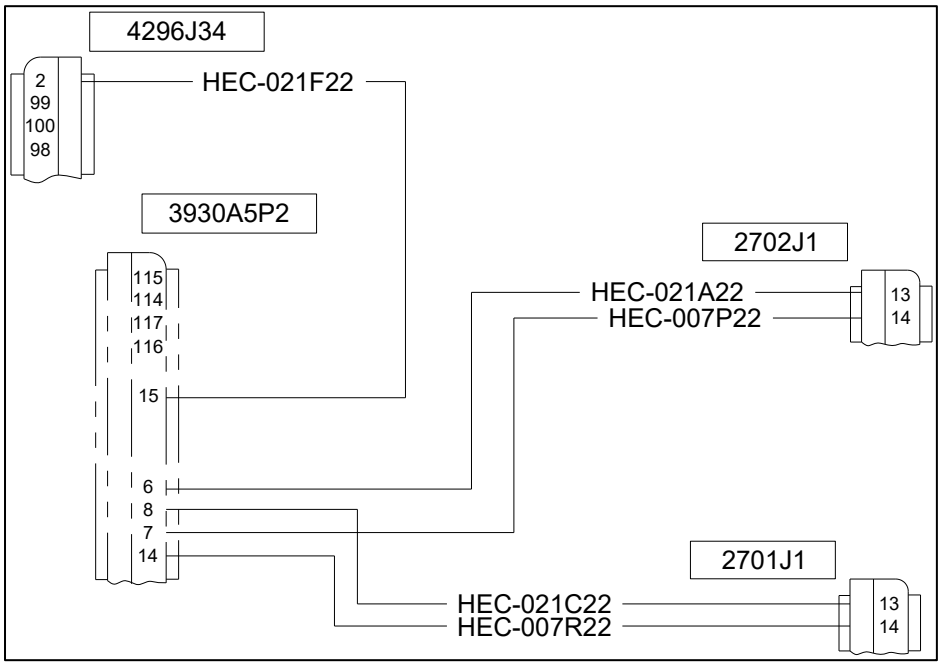

1. Remove the receptacle 4296J34 from the RH keel beam, retain mounting hardware. Remove all traces of sealant.
2. Disassemble receptacle per Section 3.6.
3. Crimp on contact P/N 410-369-00 (M39029/58-360) on wire HEC-021F22.
4. Insert wire per the table below. Use an M81969/14-01 insertion/removal tool or similar.

Wire No.	4296J34 pin
HEC-021F22	2

5. Re-assemble per section 3.6 using Shield Support Ring P/N 410-500-00 and Band P/N 512-036-00 (alternate: Bell P/N 20-108-1).
6. As needed, prepare the mating surfaces of the receptacle and the keel beam mounting surface for electrical bonding.
7. Re-install the receptacle to the keel beam, re-using the hardware.

This document is proprietary to Onboard Systems Int'l. Disclosure or reproduction is not allowed. © 2025 Onboard Systems Int'l., all rights reserved.

8. Verify the electrical bonding between the receptacle and the keel beam and if satisfactory, apply sealant to seal the bonding area.
9. Connect the connector 4296P34 to the receptacle 4296J34.
10. Route wire HEC-021F22 from receptacle 4296J34 to connector 3930A5P2, trim it to length as needed.
11. Disconnect the connector 3930A5P2 from the receptacle 3930A5J2.
12. Disassemble the connector per Section 3.6.
13. Crimp on contacts P/N 410-370-00 (M39029/56-348) to the five wires.
14. Insert wire HEC-021F22 from 4296J34 and wires HEC-007P22, HEC-007R22, HEC-021A22, and HEC-021C22 per the table below.

Wire No.	**3930A5P2 pin**
HEC-007P22	7
HEC-007R22	14
HEC-021A22	6
HEC-021C22	8
HEC-021F22	15

15. Re-assemble connector 3930A5P2 per section 3.6 using Shield Support Ring P/N 410-498-00 and Band P/N 512-036-00 (Alternate: Bell P/N 20-108-1).
16. Route wires HEC-007R22 and HEC-021C22 with the existing harnesses from connector 3930A5P2 to receptacle 2701J1 at the LH keel beam.
17. Disconnect the connector 2701P1 from the receptacle 2701J1.
18. Remove the receptacle from its mounting position.
19. Disassemble receptacle per Section 3.6.
20. Trim wires HEC-007R22 and HEC-021C22 to length and crimp on contacts P/N 410-370-00 (M39029/56-348).
21. Insert wires per the table below.

Wire No.	**2701J1 pin**
HEC-021C22	13
HEC-007R22	14

22. Re-assemble receptacle 2701J1 per section 3.6 using Shield Support Ring P/N 410-497-00 (M85049/93-10) and Band P/N 512-036-00 (Alternate: Bell P/N 20-108-1).

This document is proprietary to Onboard Systems Int'l. Disclosure or reproduction is not allowed. © 2025 Onboard Systems Int'l., all rights reserved.

23. Prep the mating surfaces of the receptacle 2701J1 and the LH keel beam for electrical bonding and re-install the receptacle.
24. Verify the electrical bonding between the receptacle and the LH keel beam and if satisfactory, seal the perimeter of the electrical bonding area with sealant.
25. Re-connect the connector 2701P1 to the receptacle 2701J1.
26. Route wires HEC-007P22 and HEC-021A22 with the existing harness from connector 3930A5P2 to receptacle 2702J1 in the center console.
27. Disconnect the connector 2702P1 from receptacle 2702J1.
28. Remove the receptacle from its mounting position.
29. Disassemble receptacle per Section 3.6.
30. Trim wires HEC-007P22 and HEC-021A22 to length and crimp on contacts P/N 410-370-00 (M39029/56-348).
31. Insert wires per the table below.

Wire No.	**2702J1 pin**
HEC-021A22	13
HEC-007P22	14

32. Re-assemble receptacle 2702J1 per section 3.6 using Shield Support Ring P/N 410-497-00 and Band P/N 512-036-00 (alternate: Bell P/N 20-108-1).
33. Prep the mating surfaces of the receptacle 2702J1 and the mounting surface beam for electrical bonding and re-install the receptacle.
34. Verify the electrical bonding between the receptacle and the LH keel beam and if satisfactory, seal the perimeter of the electrical bonding area with sealant.
35. Re-connect the connector 2702P1 to the receptacle 2702J1.

This document is proprietary to Onboard Systems Int'l. Disclosure or reproduction is not allowed. © 2025 Onboard Systems Int'l., all rights reserved.

3.7.5 Center Relay Panel Wiring

The following steps are completed at the center relay panel 3930A5 under the co-pilot's seat and involve connecting wires between 3930A5J2 and the two existing terminal blocks 3930A5TB2 and 3930A5TB1.

Figure 3.54 Schematic – Center Relay Panel

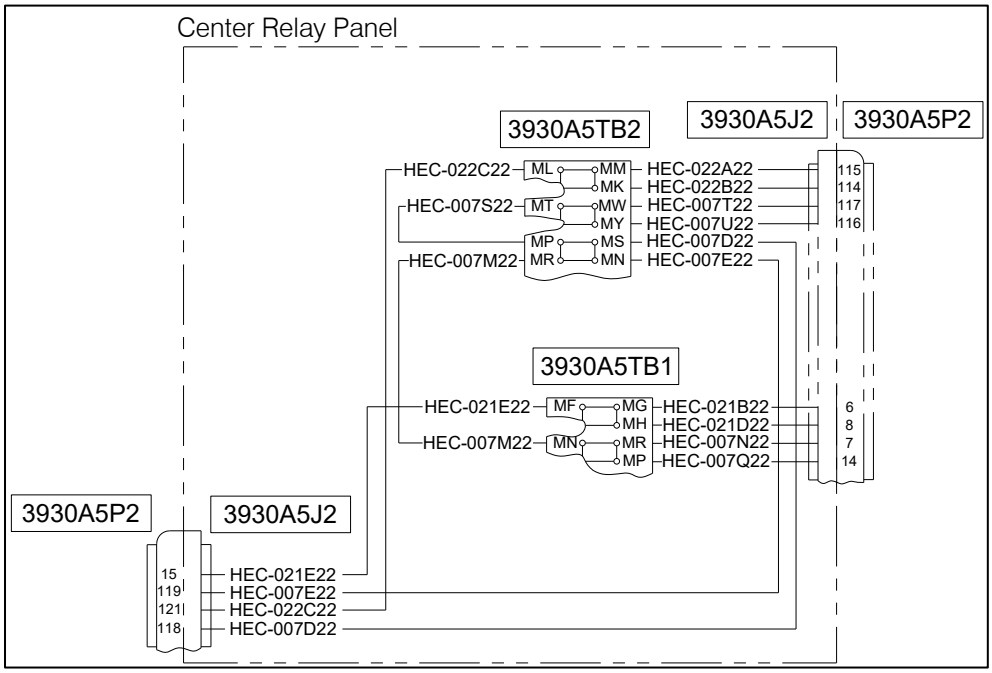

1. Disconnect connectors 3930A5P1 and 3930A5P2 from the center relay panel.
2. Remove the center relay panel from the left keel beam and remove all traces of sealant from parts.
3. Locate the following nine wires in the Internal Harness Kit P/N 210-333-00. These are included in the bag labeled "CENTER RELAY PANEL LCTN – UNDER SEAT".

- HEC-007D22
- HEC-007E22
- HEC-007M22
- HEC-007S22
- HEC-007T22
- HEC-007U22
- HEC-022A22
- HEC-022B22
- HEC-022C22

This document is proprietary to Onboard Systems Int'l. Disclosure or reproduction is not allowed. © 2025 Onboard Systems Int'l., all rights reserved.

4. Crimp contacts P/N 410-504-00 (M39029/22-191) on one end of each of these nine wires and insert into the terminal module 3930A5TB2-M per the following table. Note: wire HEC-007S22 is a jumper from P to T.

Wire No.	**3930A5TB2-M pin**
HEC-007D22	S
HEC-007E22	N
HEC-007M22	R
HEC-007S22	P
HEC-007S22	T
HEC-007T22	W
HEC-007U22	Y
HEC-022A22	M
HEC-022B22	K
HEC-022C22	L

NOTICE

Remove and discard existing twine on all cable assemblies affected by routing of the wires. Use replacement twine as required during routing of the wires.

5. Route wire HEC-007M22 from terminal module **3930A5TB2-M** to terminal module **3930A5TB1-M**.

6. Route the following wires from 3930A5TB2-M to receptacle **3930A5J2:**

Wire No.
HEC-022A22
HEC-022B22
HEC-007T22
HEC-007U22
HEC-007D22
HEC-007E22
HEC-022C22

This document is proprietary to Onboard Systems Int'l. Disclosure or reproduction is not allowed. © 2025 Onboard Systems Int'l., all rights reserved.

7. Crimp a contact P/N 410-504-00 (M39029/22-191) onto each of the following six wires and insert into terminal module 3930A5TB1-M per the following table.

Wire No.	3930A5TB1-M pin
HEC-021B22	G
HEC-021D22	H
HEC-007N22	R
HEC-007Q22	P
HEC-021E22	F
HEC-007M22*	N

*From 3930A5TB2-M

8. Route the five wires from 3930A5TB1-M (listed in preceding table) to the receptacle 3930A5J2 and collect with the other wires, trim to length as needed, crimp on contact (P/N 410-369-00 (M39029/58-360)) and insert into 3930A5J2 per the table below.

Wire No.	3930A5J2 Pin
HEC-007D22	118
HEC-007E22	119
HEC-007T22	117
HEC-007U22	116
HEC-022A22	115
HEC-022B22	114
HEC-022C22	121
HEC-021B22*	6
HEC-021D22*	8
HEC-007N22*	7
HEC-007Q22*	14
HEC-021E22*	15

*From 3930A5TB1-M

9. In preparation for re-installing the center relay panel on the LH keel beam, prepare the mating surfaces for Class R-II electrical bonding requirements.

10. Re-using the mounting hardware, install the center relay panel back into position on the keel beam.

11. Verify the electrical bonding meets the Bell Class R-II electrical bonding requirements. If satisfactory, seal the perimeter of the bonding area with a fillet of sealant.

This document is proprietary to Onboard Systems Int'l. Disclosure or reproduction is not allowed. © 2025 Onboard Systems Int'l., all rights reserved.

12. Re-connect the connectors 3930A5P1 and 3930A5J2 to the mating receptacles on the center relay panel.

3.7.6 Relay Module Assembly P/N 232-885-00

The relays for the primary Cargo Hook and secondary HEC Hook are provided pre-assembled onto a mounting plate and their sockets are pre-wired for convenience of installation. Wires are routed from the sockets to receptacle 4296J8 and ground point 3040GD2 (ground 2580GD1 is incorporated into the Relay Module Assembly and is provided with the ring terminals terminated).

Figure 3.55 Schematic – Relay Module Assembly

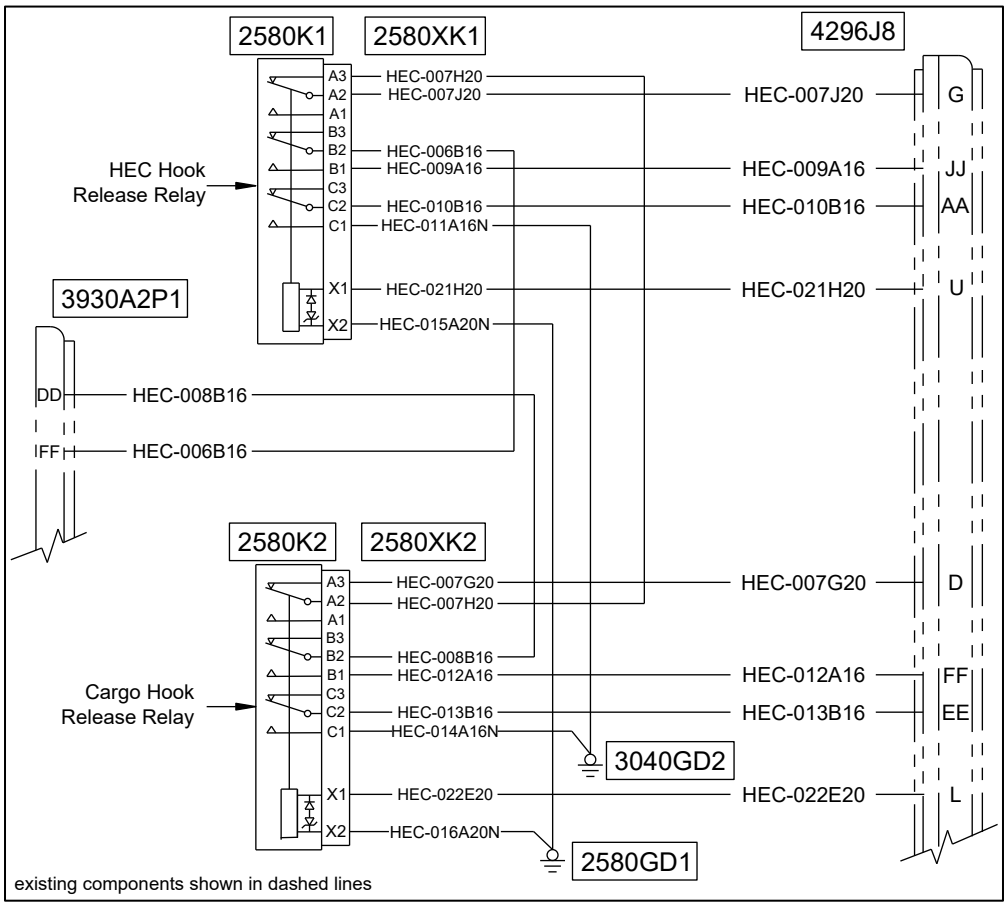

The mating surfaces of the Relay Mount Bracket which interface with the mounting standoffs are free of primer and are treated with chemical conversion coating.

13. Install the Relay Module Assembly on the four standoffs installed previously on the nose aft bulkhead with four screws (P/N 511-259-00) and washers (P/N 510-710-00) provided with the Relay Module Assembly, reference Figure 3.56.

This document is proprietary to Onboard Systems Int'l. Disclosure or reproduction is not allowed. © 2025 Onboard Systems Int'l., all rights reserved.

Figure 3.56 Relay Module Installation

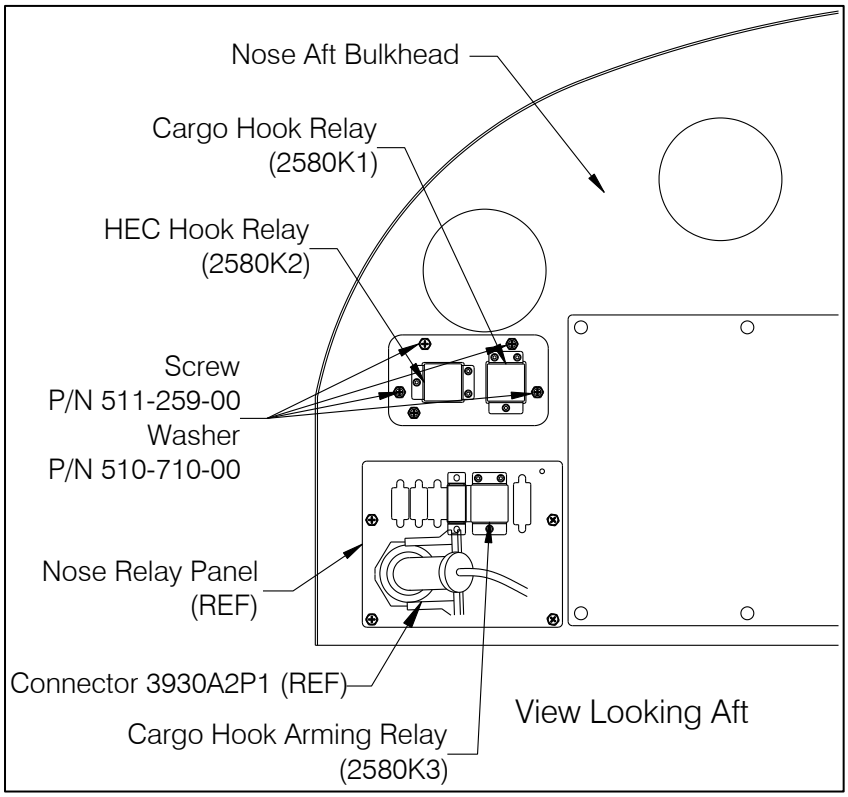

14. Route wires HEC-011A16N and HEC-014A16N with the existing adjacent harness (W201) from relay sockets to the ground stud 3040GD2 on the nose aft bulkhead assembly.

    Optionally use the provided length of expandable sleeving (P/N 420-024-00) and heat shrink (P/N 450-005-00 and P/N 450-006-00) to cover the wires to assist in routing of these wires and the wires to 4296J8 (see below) through the center of the bulkhead area. Cut to length as needed.

15. Trim the wires to length as necessary to terminate at the ground stud.

16. Strip each wire and crimp a terminal lug P/N 410-258-00 (MS25036-108) on.

17. Attach the terminal lugs to the ground stud with the existing hardware and secure.

18. Route the following wires with the wire harness W201 from the hook release relays (2580K1 and 2580K2) to receptacle 4296J8.

This document is proprietary to Onboard Systems Int'l. Disclosure or reproduction is not allowed. © 2025 Onboard Systems Int'l., all rights reserved.

Optionally use the provided length of expandable sleeving (P/N 420-024-00) and heat shrink (P/N 450-005-00 and P/N 450-006-00) to cover the wires to assist in routing of these wires through the center of the bulkhead area. Cut to length as needed.

Wires from 2580K1	Wires from 2580K2
HEC-007J20	HEC-007G20
HEC-009A16	HEC-012A16
HEC-010B16	HEC-013B16
HEC-021H20	HEC-022E20

19. Remove the receptacle 4296J8 from its mounting position.
20. Disassemble receptacle per Section 3.6.
21. Trim wires to length as necessary.
22. Crimp contacts P/N 410-921-00 (M39029/56-352) on the four 16 AWG wires and insert into 4296J8 per the table below.

Wire No.	4296J8 pin
HEC-009A16	JJ
HEC-010B16	AA
HEC-012A16	FF
HEC-013B16	EE

23. Crimp a contact M39029/56-351 on wire HEC-007B22 (routed previously from 3930A2P1) and insert into 4296J8 per the following.

Wire No.	4296J8 pin
HEC-007B22	C

24. Crimp a contact M39029/56-351 on the following four 20 AWG wires and insert into 4296J8 per the following.

Wire No.	4296J8 pin
HEC-007G20	D
HEC-007J20	G
HEC-021H20	U
HEC-022E20	L

25. Re-assemble receptacle 4296J8 per section 3.6 using Shield Support Ring (P/N 410-497-00) and Band P/N 512-036-00 (alternate: Bell P/N 20-108-1).
26. Prep the mating surfaces of the receptacle and the bulkhead for electrical bonding requirements and install the receptacle, re-using the hardware.

This document is proprietary to Onboard Systems Int'l. Disclosure or reproduction is not allowed. © 2025 Onboard Systems Int'l., all rights reserved.

27. Verify the electrical bonding between the receptacle and bulkhead and seal the perimeter of the receptacle.
28. Re-connect the connector 4296P8 to the receptacle 4296J8.
29. Route wires HEC-006B16 and HEC-008B16 with the existing harnesses from the relay sockets to connector **3930A2P1** (just below the relays).
30. Disconnect the connector 3930A2P1 from receptacle 3930A2J1.
31. Disassemble connector per Section 3.6.
32. Trim wires HEC-006B16 and HEC-008B16 to length and terminate per the following section.

3.7.7 Nose Compartment Wiring

This section covers the installation of wires routed from connector 3930A2P1 (at relay panel 3930A2) to 4296J8, 3910A9P2 and to the circuit breaker panel connectors 3940A1P2 and 3940A2P2.

Arming Relay Harness P/N 270-255-00 is also installed at the relay panel 3930A2, refer to Section 3.7.8 in conjunction with this section.

This document is proprietary to Onboard Systems Int'l. Disclosure or reproduction is not allowed. © 2025 Onboard Systems Int'l., all rights reserved.

Figure 3.57 Schematic for Wires from 3930A2P1

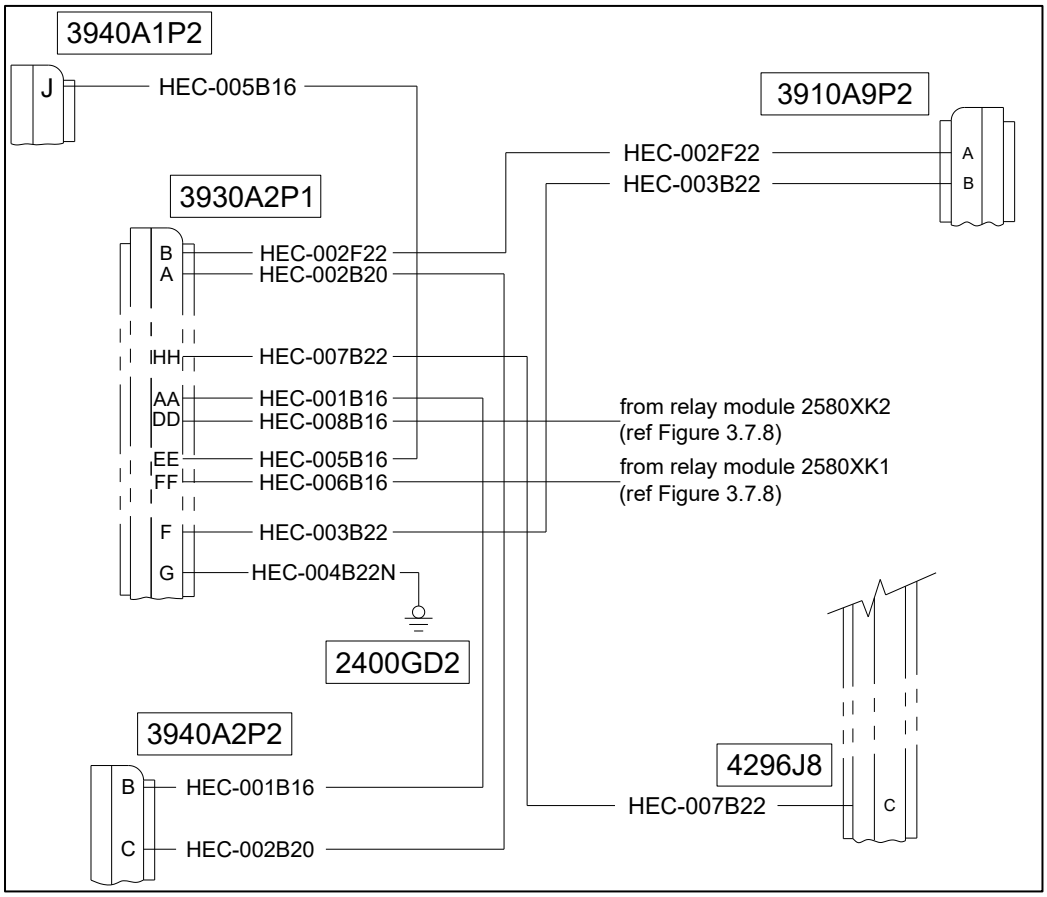

Locate wires HEC-002F22, HEC-002B20, HEC-007B22*, HEC-001B16, HEC-005B16, HEC-003B22, HEC-004B22N of Internal Harness Kit P/N 210-333-00. These wires are included in the bag labeled "RELAY PANEL LCTN – NOSE COMPARTMENT RH". *HEC-007B22 is routed from 4296J8.

33. Crimp a contact P/N 410-495-00 (M39029/56-351) on each of the 20 and 22 AWG wires and insert into connector 3930A2P1 per the table below.

Wire No.	3930A2P1 pin
HEC-002B20	A
HEC-002F22	B
HEC-003B22	F
HEC-004B22N	G
HEC-007B22	HH

34. Crimp a contact P/N 410-921-00 (M39029/56-352) on each of the 16 AWG wires and insert into connector 3930A2P1 per the table below.

This document is proprietary to Onboard Systems Int'l. Disclosure or reproduction is not allowed. © 2025 Onboard Systems Int'l., all rights reserved.

Wire No.	3930A2P1 pin
HEC-001B16	AA
HEC-008B16	DD
HEC-005B16	EE
HEC-006B16	FF

35. Re-assemble the connector 3930A2P1 per Section 3.6.
36. Route wires HEC-002F22 and HEC-003B22 with the existing harness (W201) from connector 3930A2P1 to connector 3910A9P2 located below the Arming Switch in the pedestal (between the pilot and co-pilot seats).
37. Crimp contacts 410-495-00 (M39029/56-351) onto HEC-002F22 and HEC-003B22 and insert into A and B of connector 3910A9P2 respectively.
38. Route wires HEC-001B16 and HEC-002B20 with the W201 harness from connector 3930A2P1 to connector 3940A2P2 at the RH CB panel in the pedestal (for primary CARGO Hook Power and Control). **These wires will be terminated later.**
39. Route wire HEC-004B22N with the W201 harness from the connector 3930A2P1 to the ground stud 2400GD22 and trim to length as needed.
40. Crimp terminal lug P/N 410-924-00 (MS25036-147) onto HEC-004B22N.
41. Remove the hardware from the ground stud, attach the terminal lug and secure, re-using the hardware.
42. Route wire HEC-005B16 with the existing harnesses W201 and W101 from 3930A2P1 to the connector 3940A1P2 at the LH CB panel in the pedestal (for HEC Hook Power). **This wire will be terminated later.**

3.7.8 Cargo Hook Arming Relay Kit P/N 270-255-00

The arming relay is installed on an existing relay panel assembly 3930A2 on the nose aft bulkhead. The relay socket for this relay is provided pre-wired (as harness P/N 270-255-00) for convenience of installation.

This document is proprietary to Onboard Systems Int'l. Disclosure or reproduction is not allowed. © 2025 Onboard Systems Int'l., all rights reserved.

Figure 3.58 Schematic for 270-255-00

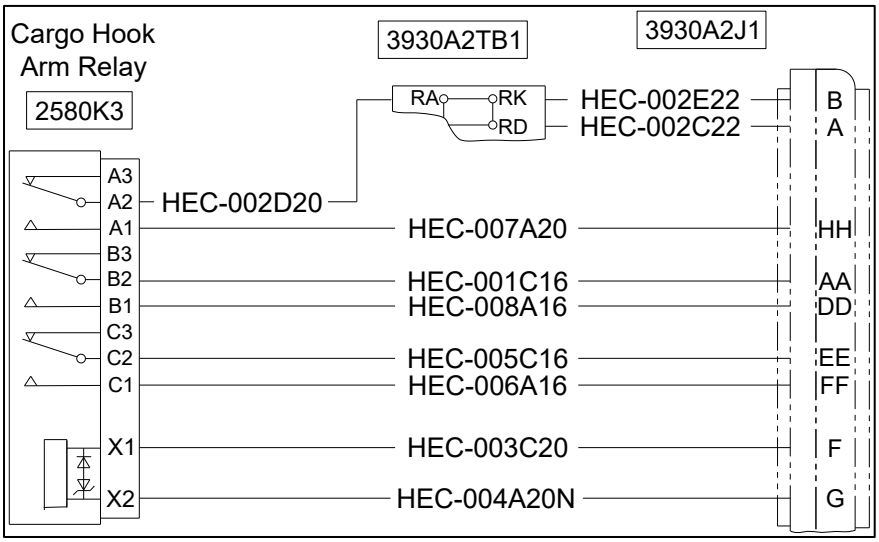

1. Just below the cargo hook relays, remove the existing right-side nose relay panel (3930A2) from the nose aft bulkhead. Retain the attach hardware.

Figure 3.59 Arming Relay Location

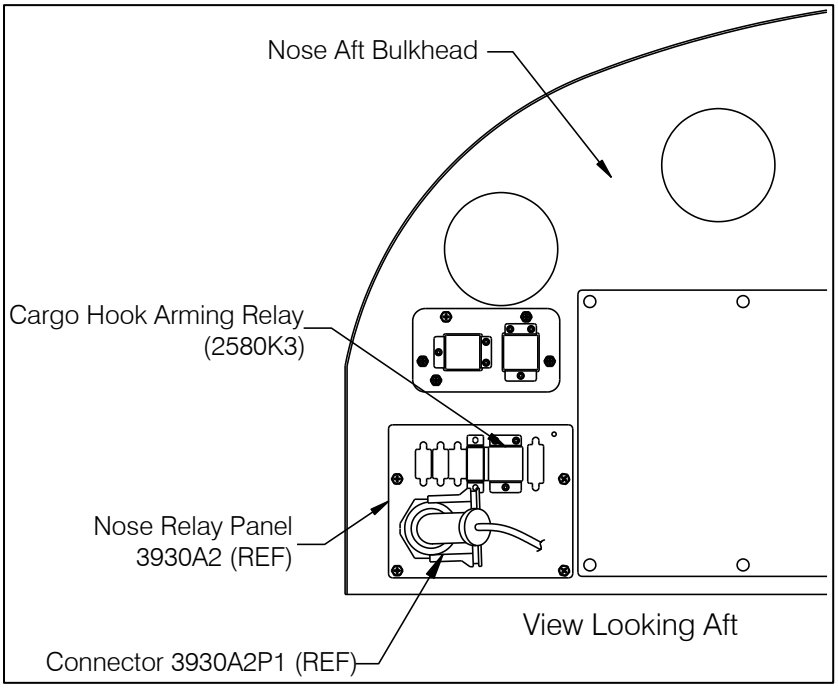

2. Assemble the cargo hook arming relay (2580K3) and the relay socket with wires (P/N 270-255-00) to the relay panel (with relay socket hardware provided bagged and tagged with harness).

This document is proprietary to Onboard Systems Int'l. Disclosure or reproduction is not allowed. © 2025 Onboard Systems Int'l., all rights reserved.

3. Assemble the Junction Module P/N 410-502-00 (3930A2TB1) into the existing guide rail on the relay panel 3930A2.
4. Route the following wires from the arming relay socket to the receptacle 3930A2J1.

Wire No.
HEC-001C16
HEC-003C20
HEC-004A20N
HEC-005C16
HEC-006A16
HEC-007A20
HEC-008A16

5. Route wire HEC-002D20 with the existing harness from the relay socket 2580XK3 to the terminal module 3930A2TB1-R and trim to length as needed.
6. Locate the wires HEC-002C22 and HEC-002E22 and combine with HEC-002D20 from the relay socket.
7. Crimp the supplied contacts (provided with terminal module) onto the end of these wires and insert into the terminal module per the following.

Wire No.	3930A2TB1-R pin
HEC-002C22	D
HEC-002D20	A
HEC-002E22	K

8. Route wires HEC-002C22 and HEC-002E22 with the existing wires (W222) from the terminal module to the receptacle 3930A2J1.
9. Locate the four 16 AWG wires (HEC-001C16, HEC-005C16, HEC-006A16, and HEC-008A16) at the receptacle 3930A2J1 and trim to length as needed.
10. Crimp contacts P/N 410-368-00 (M39029/58-364) on these wires and insert into receptacle 3930A2J1 per the following.

Wire No.	3930A2J1 pin
HEC-001C16	AA
HEC-005C16	EE
HEC-006A16	FF
HEC-008A16	DD

This document is proprietary to Onboard Systems Int'l. Disclosure or reproduction is not allowed. © 2025 Onboard Systems Int'l., all rights reserved.

11. Crimp contacts P/N 410-314-00 (M39029/58-363) on wires HEC-002C22, HEC-002E22, HEC-003C20, HEC-004A20N and HEC-007A20.
12. As necessary, position and shrink a 1" long piece of heat shrink (P/N 450-001-00) on wires HEC-002C22 and HEC-002E22 where they enter the connector grommet to ensure a good seal.
13. Insert these five wires into 3930A2J1 per the following table.

Wire No.	**3930A2J1 pin**
HEC-002C22	A
HEC-002E22	B
HEC-003C20	F
HEC-004A20N	G
HEC-007A20	HH

14. Prep the mating surfaces of the relay panel and the existing four standoffs on the nose aft bulkhead assembly as necessary for electrical bonding requirements.
15. Install the relay panel to the standoffs, re-using the hardware that was removed earlier.
16. Verify the electrical bonding between the screw heads of the attaching hardware and the standoffs meets the electrical bonding requirements and seal the electrical bonding with sealant (C-251).
17. Re-connect the 3930A2P1 connector to the mating receptacle.
18. Install the "2580K3" decal on the relay panel, adjacent to the relay location.
19. Position the Support (P/N 512-072-00) as shown below and secure to the hole created in the Nose Relay Panel with rivet P/N 511-277-00.
20. Route all wires (W201 harness) from the Relay Module past the Support and secure the bundle to the Support with a cable tie (P/N 512-011-00 or equivalent).

This document is proprietary to Onboard Systems Int'l. Disclosure or reproduction is not allowed. © 2025 Onboard Systems Int'l., all rights reserved.

Figure 3.60 Wire Support Installation

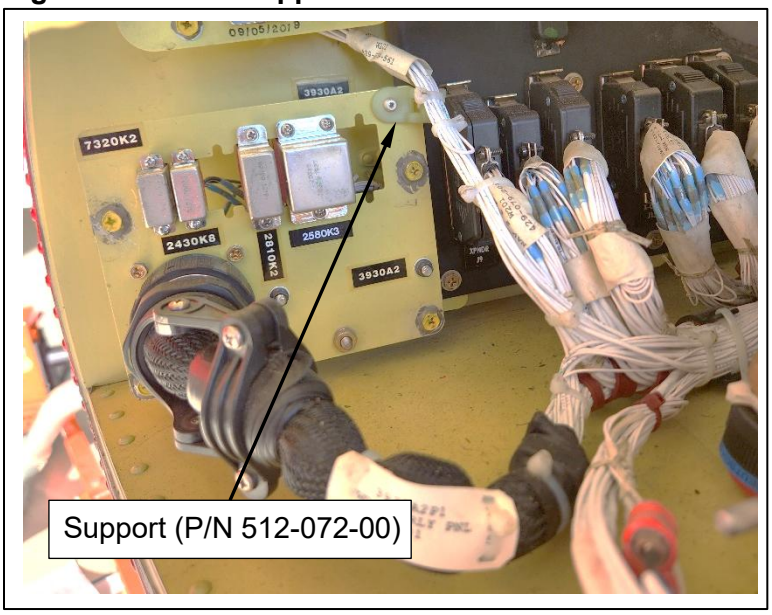

3.7.9 Arming Switch Kit P/N 210-334-00

The Arming Switch Kit P/N 210-334-00 provides the components to install the Arming Switch in the pedestal between the pilot and co-pilot seats and connect to receptacle 3910A9J2. This section also covers the termination of the wires HEC-002F22 and HEC-003B22 (from harness kit 210-333-00) to connector 3910A9P2.

Figure 3.61 Arming Switch Kit Schematic

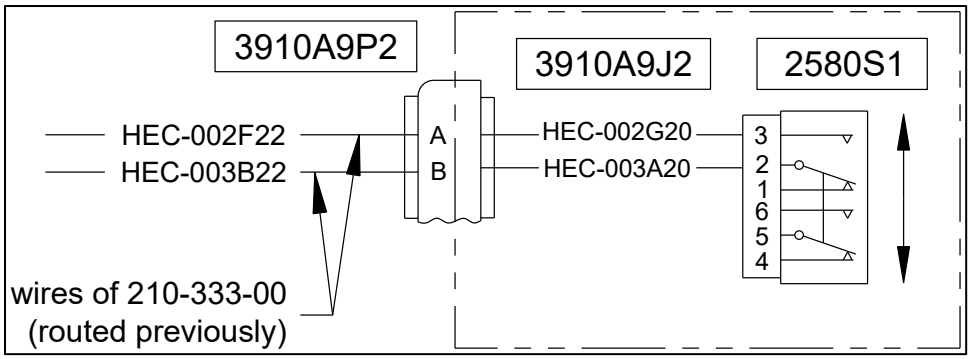

This document is proprietary to Onboard Systems Int'l. Disclosure or reproduction is not allowed. © 2025 Onboard Systems Int'l., all rights reserved.

NOTICE

The connector for 3910A9P2 (P/N 410-302-00) and receptacle for 3910A9J2 (P/N 410-147-00) are included but are not needed if the 600 lb external hoist kit is installed.

1. Locate the miscellaneous control panel 3910A9 between the pilot and co-pilot seats.
2. Remove the two screws and lit panel. Retain the screws.
3. Remove and discard the plug button from the control panel.
4. If present, remove and retain the existing receptacle 3910A9J2 retainer by removing four screws and washers. This receptacle is present if the external hoist kit is installed. Otherwise use the supplied receptacle (P/N 410-147-00).

NOTICE

If the 600 lb external hoist kit is installed, the supplied receptacle P/N 410-147-00, connector P/N 410-302-00, and backshell P/N 410-922-00 are NOT used.

5. Secure the Arming Switch (supplied with wires HEC-002G20 and HEC-003A20 terminated to it) to the control panel with the hardware provided with the switch and tighten.
6. Route the two wires from the switch to the receptacle 3910A9J2 and trim the wires to length as necessary.
7. Crimp on contacts P/N 410-314-00 (M39029/58-363) at the end of each wire and insert into the receptacle per the following.

Wire No.	**3910A9J2 Pin**
HEC-002G20	A
HEC-003A20	B

8. Prepare the mating surfaces of the control panel and the receptacle for electrical bonding requirements.
9. Install the receptacle in the control panel with the retainer, screws, and washers removed previously. Tighten the screws.

This document is proprietary to Onboard Systems Int'l. Disclosure or reproduction is not allowed. © 2025 Onboard Systems Int'l., all rights reserved.

10. Verify the electrical bonding between the control panel and the receptacle meets the Bell requirements.
11. Apply sealant around the perimeter of the bonding area to seal it.
12. Re-install the lit panel with the two screws and tighten the screws.
13. Locate wires HEC-002F22 and HEC-003B22 (routed previously from 3930A2P1) at connector 3910A9P2 and trim to length as necessary. If this connector is not present use the supplied connector (P/N 410-302-00) and backshell (P/N 410-922-00).
14. Crimp on contacts M39029/56-351 (supplied with connector P/N 410-302-00).
15. Insert the contacts into the connector 3910A9P2.

Wire No.	3910A9P2 Pin
HEC-002F22	A
HEC-003B22	B

16. Re-assemble the adapter onto the connector or if using the supplied components – thread the backshell onto the connector.
17. Re-connect the connector 3910A9P2 to the receptacle 3910A9J2 at the bottom of the control panel.
18. Prep the mating surfaces of the control panel and the pedestal for Class R-II electrical bonding requirements.
19. Re-install the control panel into the pedestal.
20. Verify the electrical bonding between the control panel and pedestal meets the Bell Class R-I requirements.

3.7.10 Wires to CARGO Hook CBs

Wire harness kit P/N 210-333-00 includes wires HEC-001A16 and HEC-002A20 for connecting the 3940A2J2 receptacle to the primary Cargo Hook power and control circuit breakers. These wires are included in the bag labeled "CB PANEL LCTN – PEDESTAL RH".

The following steps also address connection of two wires HEC-001B16 and HEC-002B20 routed previously to 3940A2P2.

This document is proprietary to Onboard Systems Int'l. Disclosure or reproduction is not allowed. © 2025 Onboard Systems Int'l., all rights reserved.

Figure 3.62 Schematic – Primary Cargo Hook CBs

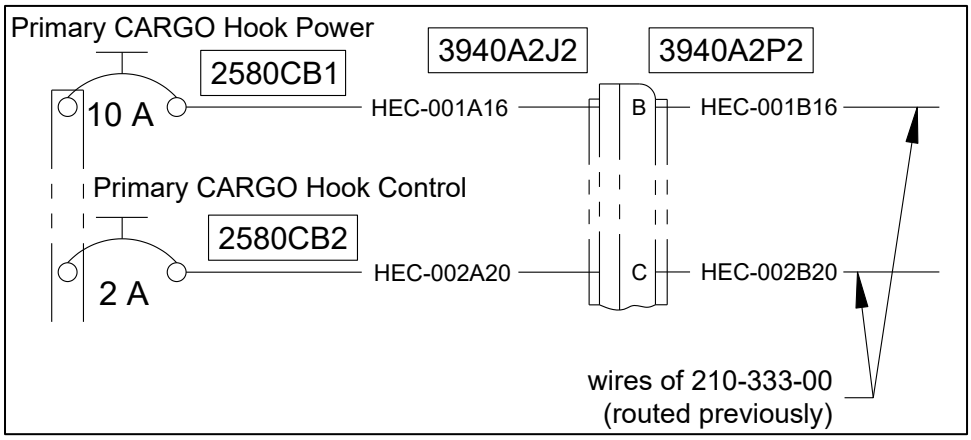

1. Remove the forward RH circuit breaker panel (3940A2) from the pedestal, retain the hardware.
2. Disconnect the connector 3940A2P2 from the receptacle 3940A2J2 and modify the connector per the following.
3. Disassemble connector 3940A2P2 per section 3.6.
4. Disassemble the connector and adapter.
5. Locate wires HEC-001B16 and HEC-002B20 at the connector and trim to length as necessary.
6. Crimp contact P/N 410-368-00 (M39029/58-364) on each wire and insert into the connector per the table below.

Wire No.	**3940A2P2 pin**
HEC-001B16	B
HEC-002B20	C

7. Re-assemble per section 3.6 using Shield Support Ring P/N 410-494-00 and Band P/N 512-036-00 (alternate: Bell P/N 20-108-1).
8. Install the applicable marking label for the 3940A2P2 with cable ties (P/N 512-029-00).
9. Install a terminal lug P/N 410-294-00 (MS25035-107) on one end of the HEC-001A16 wire.
10. Locate the supplied 10-amp circuit breaker (P/N 440-007-00) (2580CB1) and attach the terminal lug to the load side of the circuit breaker with the hardware included with the circuit breaker.
11. Remove and discard the plug button from the circuit breaker panel (on EMERG-2) and install the circuit breaker.

This document is proprietary to Onboard Systems Int'l. Disclosure or reproduction is not allowed. © 2025 Onboard Systems Int'l., all rights reserved.

12. Attach the circuit breaker to the EMERG-2 28 VDC No.2 bus bar with the hardware provided with the circuit breaker.

The following steps are for the Cargo Hook Control circuit breaker (P/N 440-022-00) (2580CB2).

13. Install a terminal lug P/N 410-240-00 (MS25036-102) on one end of wire HEC-002A20.
14. Discard the hardware provided with the circuit breaker and attach the terminal lug to the load side of the 2-amp circuit breaker P/N 440-022-00 (MS26574-2) with the hardware supplied with the circuit breaker and secure.
15. Remove and discard the plug button adjacent to the 2580CB1 circuit breaker installed previously and install the 2-amp circuit breaker
16. Attach the circuit breaker to the 28VDC EMER No. 2 bus bar with the hardware provided with the circuit breaker.

Connect the circuit breakers to 3940A2J2 receptacle per the following:

17. Route the HEC-001A16 and HEC-002A20 wires with the existing harness (W221) from the circuit breakers to the receptacle 3940A2J2.
18. Trim the wires to length as needed.
19. Crimp contacts P/N 410-368-00 (M39029/58-364) on each wire and insert into the 3940A2J2 receptacle per the following.

Wire No.	**3940A2J2 pin**
HEC-001A16	B
HEC-002A20	C

20. Re-assemble the receptacle 3940A2J2 per Section 3.6.
21. Prep the mating surfaces of the circuit breaker panel and the pedestal structure for Bell's Class R-II electrical bonding requirements.
22. Re-connect the connector 3940A2P2 to the receptacle.
23. Re-install the circuit breaker panel into the pedestal structure, re-using the hardware removed previously.
24. Verify the electrical bonding between the circuit breaker panel and the pedestal meets the Bell Class R-II bonding requirements.

This document is proprietary to Onboard Systems Int'l. Disclosure or reproduction is not allowed. © 2025 Onboard Systems Int'l., all rights reserved.

3.7.11 Wires to HEC Hook CB

Internal harness kit P/N 210-333-00 includes wires HEC-005A16 for connecting the 3940A1J2 receptacle to the HEC Hook power circuit breaker (2580CB3). This wire is included in the bag labeled "CB PANEL LCTN – PEDESTAL LH".

The following steps also address connection of wire HEC-005B16 routed previously to 3940A1P2.

Figure 3.63 Schematic – HEC Hook CB

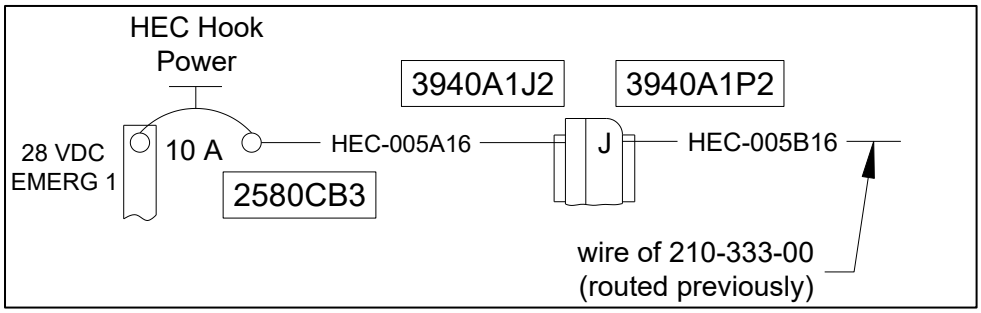

1. Remove the left side circuit breaker panel (3940A1) from the pedestal assembly and retain the hardware.
2. Disconnect the connector 3940A1P2 from the receptacle 3940A1J2.
3. Disassemble connector 3940A1P2 per section 3.6.
4. Disassemble the connector and adapter.
5. Locate wire HEC-005B16 at the connector and trim to length as necessary.
6. Crimp contact M39029/58-364 (P/N 410-368-00) on the wire and insert into the connector per the table below.

Wire No.	3940A1P2 pin
HEC-005B16	J

7. Re-assemble per section 3.6 using Shield Support Ring P/N 410-494-00 (M85049/93-06) and Band P/N 512-036-00 (alternate: Bell P/N 20-108-1).
8. Install the applicable marking label for the connector with two cable ties.

The following steps are to connect the circuit breaker 2580CB3 to 3940A1J2.

9. Crimp a terminal lug P/N 410-294-00 (MS25036-107) on one end of wire HEC-005A16.

This document is proprietary to Onboard Systems Int'l. Disclosure or reproduction is not allowed. © 2025 Onboard Systems Int'l., all rights reserved.

10. At the load side of the circuit breaker, attach the terminal lug with the hardware supplied with the circuit breaker.
11. At the power side of the circuit breaker, remove and discard the existing hardware.
12. On the circuit breaker panel remove and discard the plug button on EMERG-1 and install the circuit breaker.
13. Attach the circuit breaker to the 28VDC EMER No. 1 bus bar with the hardware provided with the circuit breaker.

Connect the HEC-005A16 wire to the 3940A1J2 receptacle per the following:

14. Disassemble the 39040A1J2 receptacle per Section 3.6.
15. Route wire HEC-005A16 with the existing wire harness (W121) from the circuit breaker to the 3940A1J2 receptacle and trim to length as necessary.
16. Crimp contact M39029/56-352 (P/N 410-318-00) on the HEC-005A16 wire and insert into the receptacle per the following.

Wire No.	**3940A1J2 pin**
HEC-005A16	J

17. Re-assemble the receptacle 3940A1J2 per section 3.6.
18. Prep the mating surfaces of the circuit breaker panel and the pedestal structure for the Bell Class R-II electrical bonding requirements.
19. Re-connect the connector 3940A1P2 to the receptacle.
20. Re-install the circuit breaker panel into the pedestal structure, re-using the hardware removed previously.
21. Verify the electrical bonding between the circuit breaker panel and the pedestal meets the Bell Class R-II bonding requirements.

This document is proprietary to Onboard Systems Int'l. Disclosure or reproduction is not allowed. © 2025 Onboard Systems Int'l., all rights reserved.

4.0 Load Weigh System Fixed Electrical Installation

The Load Weigh System is optional, if not installing this system, skip to the next section.

The fixed electrical components of the load weigh system are the C-40 load weigh indicator (P/N 210-293-01) and three internal wire harness (P/Ns 270-310-00, 270-311-00, and 270-312-00). The C-40 Indicator can be mounted for LH PIC or RH PIC. A Bracket is provided for the configuration (LH or RH forward door post) depending on the kit P/N ordered (i.e. – LH or RH PIC kit).

4.1 C-40 Indicator Installation

The C-40 Indicator is mounted on the RH or LH forward door post, mounted to the bracket that supports the vent. The installation procedure for the C-40 Indicator is the same for the RH and the LH side with the exception of the figures shown below being mirrored.

Figure 4.1 C-40 Installation Overview (RH shown)

1. Remove the trim piece and the vent outlet from the door post and retain the vent outlet and its screws. If the trim is to be retained, it will require modication, otherwise leave it off.

This document is proprietary to Onboard Systems Int'l. Disclosure or reproduction is not allowed. © 2025 Onboard Systems Int'l., all rights reserved.

Figure 4.2 Parts to Remove

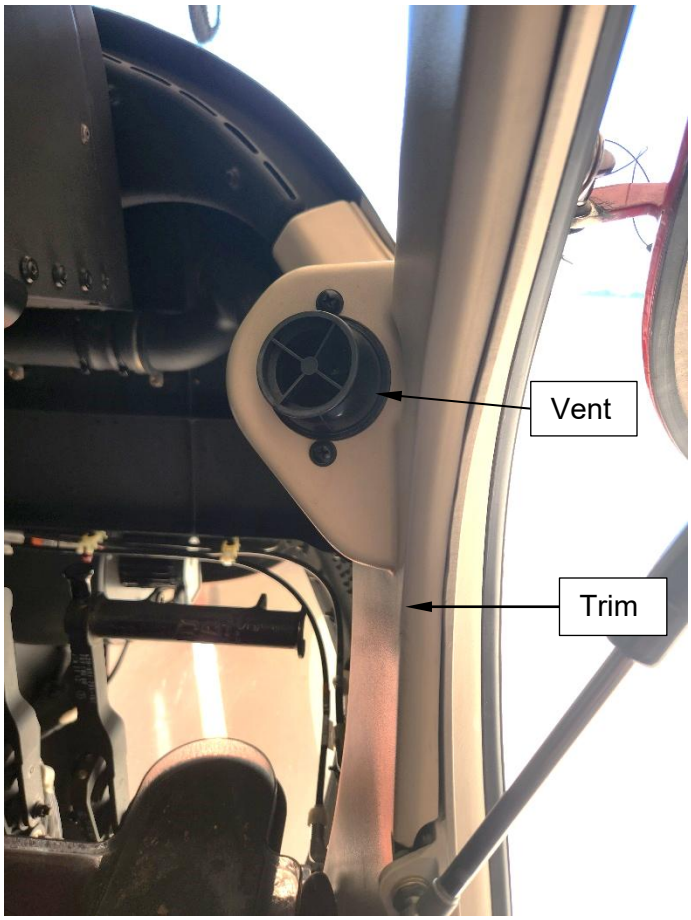

2. Position the C-40 Indicator Bracket (P/N 292-183-00 for LH or P/N 292-183-01 for RH) on the vent bracket and align the two holes with the two holes in the vent bracket.
3. Position the vent outlet over the C-40 Indicator Bracket and secure with the two screws that were previously removed.
4. Match drill Ø.177 in. (4.5 mm) the vent bracket through the lower two holes of the C-40 Indicator Bracket (reference Figure 4.3).

This document is proprietary to Onboard Systems Int'l. Disclosure or reproduction is not allowed. © 2025 Onboard Systems Int'l., all rights reserved.

Figure 4.3 Match Drill Locations

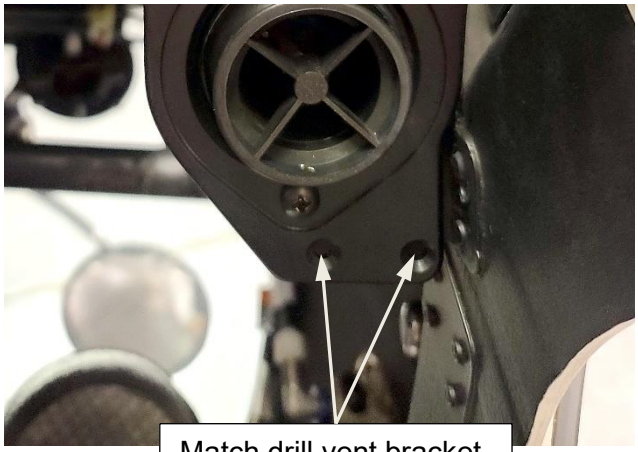

5. Secure the C-40 Indicator Bracket through these lower two holes to the vent bracket with the two supplied screws (P/N 510-816-00), washers (P/N 511-024-00) and nuts (P/N 511-023-00).
6. Position the C-40 Indicator on the inside of the bracket and secure it with the four supplied screws (P/N 511-223-00).
7. Cut out the trim as needed to accommodate the C-40 Indicator Bracket or leave the trim off.
8. If re-installing the modified trim, remove the vent outlet screws, re-position the trim over the C-40 Indicator Bracket and the vent bracket and secure.

This document is proprietary to Onboard Systems Int'l. Disclosure or reproduction is not allowed. © 2025 Onboard Systems Int'l., all rights reserved.

4.2 Load Weigh Internal Harness Installation

The wiring diagrams for the C-40 Indicator installation for RH side and LH side are shown in Figure 4.4 and Figure 4.5 respectively. Instructions are provided in the sections 4.2.1 through 4.2.4 depending on RH or LH side.

Figure 4.4 Wiring Diagram for RH C-40 Installation

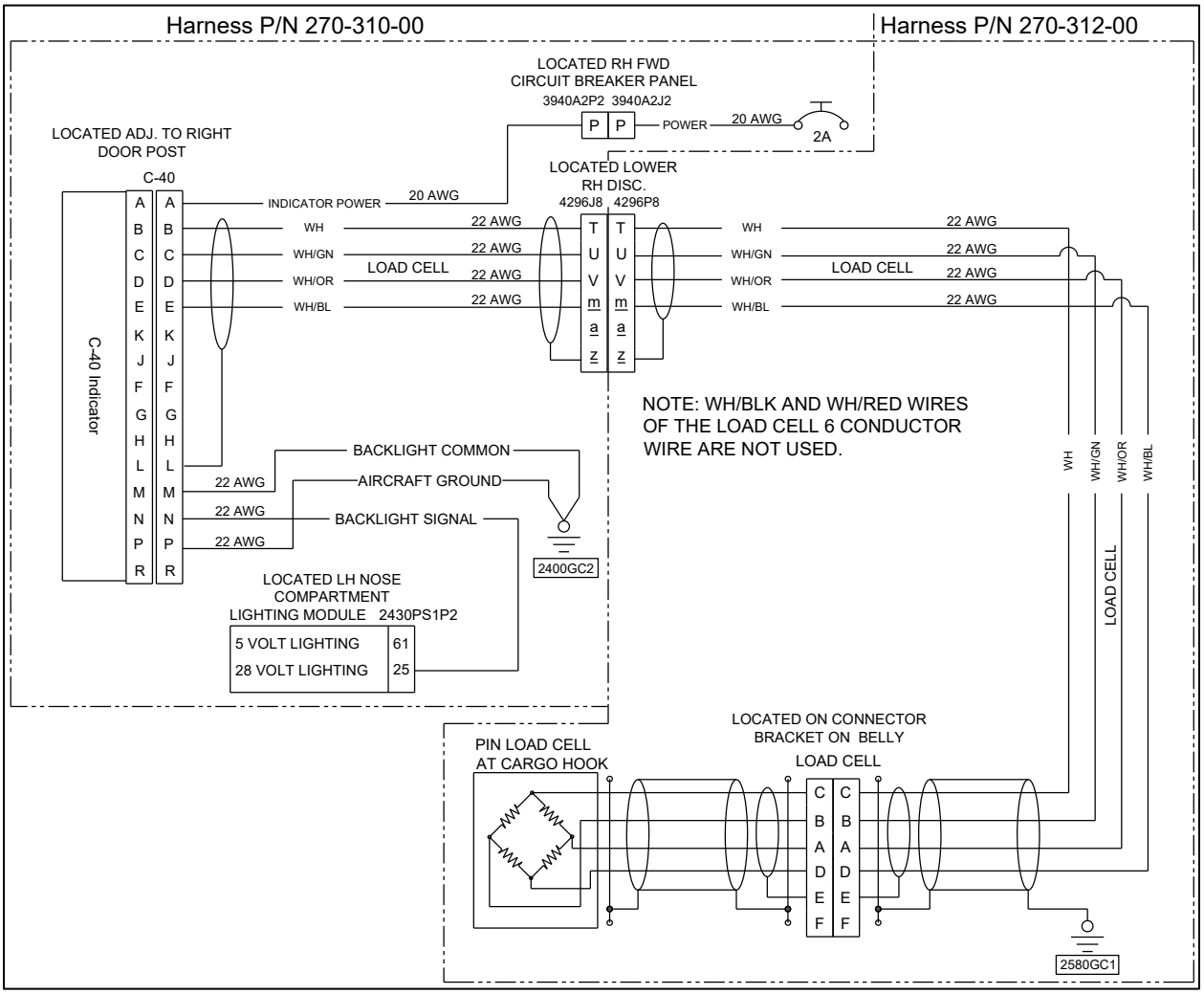

This document is proprietary to Onboard Systems Int'l. Disclosure or reproduction is not allowed. © 2025 Onboard Systems Int'l., all rights reserved.

Figure 4.5 Wiring Diagram for LH C-40 Installation

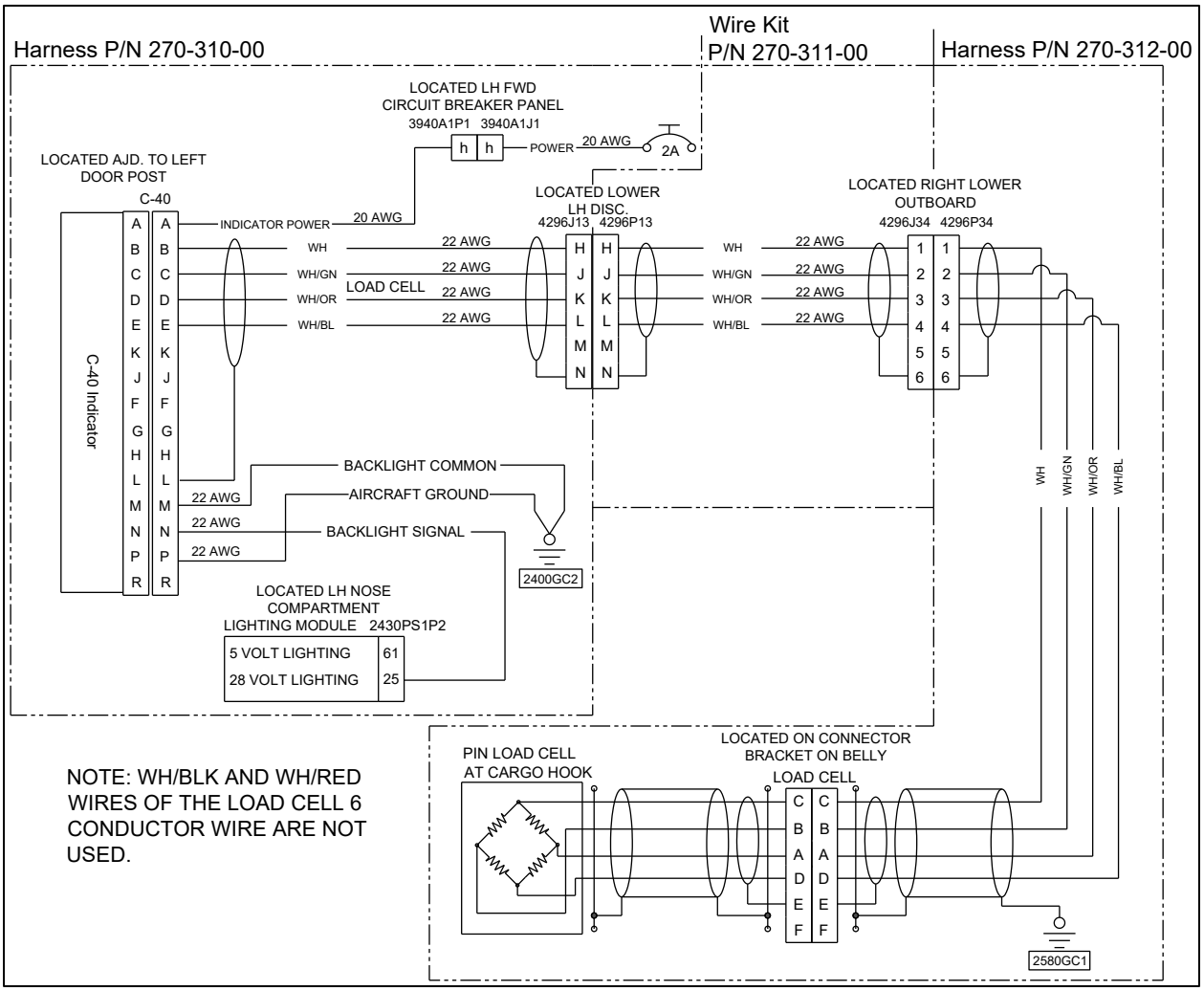

4.2.1 Harness Installation (P/N 270-310-00) from C-40

From the C-40 indicator, route and connect the wires of harness P/N 270-310-00 per the following.

1. Connect the wire harness connector (labeled C-40) to the connector on the back of the C-40 Indicator.
2. For the C-40 installation on the **LH** door post:

   Route the 6-conductor LOAD CELL wire to the existing wire harness and then route with this harness to receptacle 4296J13 at the LH anti-plough bulkhead. One option for routing is to attach loop clamps (not supplied) to the standoffs that support the large loop clamps the hold the duct that routs to the vent. Route inboard along the duct and then route down alongside the right side of the center console.

This document is proprietary to Onboard Systems Int'l. Disclosure or reproduction is not allowed. © 2025 Onboard Systems Int'l., all rights reserved.

3. For the C-40 Installation on the **RH** door post.

   Route the 6-conductor LOAD CELL wire to the existing wire harness and then route with this harness to receptacle 4296J8 at the RH anti-plough bulkhead. One option for routing is to attach loop clamps (not supplied) to the standoffs that support the large loop clamps the hold the duct that routs to the vent. Route inboard along the duct and then route down alongside the side of the center console.

4. A size 14 cushioned loop clamp (P/N 512-074-00) is provided to accommodate the routing of this 6-conductor wire, if necessary use this loop clamp to replace the existing size 12 cushioned loop clamp.
5. Trim the 6-conductor wire to length as necessary to terminate at appropriate connector.
6. Disconnect the connector 4296P13 from the receptacle 4296J13 (LH) or connector 4296P8 from the receptacle 4296J8 (RH).
7. Removal all traces of sealant from the parts.

Connect the Load Cell wire to 4296J13 (for LH installation) or 4296J8 (for RH installation) per the following.

8. Disassemble the receptacle per section 3.6
9. Strip the jacket of the 6-conductor load cell wire back 1.50" and trim the shield back 1.25" (leaving .25" of shield exposed).
10. Center the shield termination (P/N 410-199-00) over the exposed shield and shrink into place with heat gun.
11. Trim the lead of the shield termination to the length of the other wires and crimp contacts P/N 410-495-00 (M39029/56-351) on and insert into the applicable receptacle (4296J13 or 4296J8) as specified in the table below.

    The recommended tooling at these connectors is as follows.

    - Crimping Tool: AFM8 W/ K43 Die
    - Extraction Tool: DRK95-20B
    - Insertion Tool: DAK95-20B

    Note: The WH/RED and WH/BLK wires of the LOAD CELL wire are not used.

This document is proprietary to Onboard Systems Int'l. Disclosure or reproduction is not allowed. © 2025 Onboard Systems Int'l., all rights reserved.

LOAD CELL Wire	4296J13 pin (LH)	4296J8 pin (RH)
WH	H	T
WH/GN	J	U
WH/OR	K	V
WH/BLU	L	m
Shield	N	z

12. Re-assemble the receptacle per Section 3.6.
13. Prepare the mating surfaces of the receptacle and the bulkhead for class R-I electrical bonding requirements.
14. Re-install the receptacle on the bulkhead with the hardware removed previously and tighten.
15. Verify the electrical bonding meets the requirements of Class R-I.
16. Apply a fillet of sealant around the perimeter of the bonded area.

The other wires from the C-40 connector are the INDICATOR POWER, AIRCRAFT GROUND, BACKLIGHT COMMON and BACKLIGHT SIGNAL wires. Route and install these wires per the following steps.

17. Route the POWER wire to existing harnesses and route with harnesses to the forward Circuit Breaker panel.

    For the left-hand PIC installation, route to 3940A1P1 at left side CB panel.
    For the right-hand PIC installation, route to 3940A2P2 at right side CB panel.
18. Remove the circuit breaker panel from the pedestal assembly and retain the hardware.

Disconnect the connector 3940A1P1 (LH) or 3940A2P2 (RH) from the receptacle 3940A1J1 (LH) or 39490A2J2 (RH) respectively and modify the connector per the following.

19. Disassemble connector 3940A1P2 per section 3.6.
20. Locate INDICATOR POWER wire at the connector and trim to length as necessary.
21. Crimp contact P/N 410-368-00 (M39029/58-364) on each wire and insert into the connector the table below depending on left hand (LH) or right hand (RH) installation. The recommended tooling at this connector is as follows.
    - Crimping Tool: MH860 W/ 86-3 Die
    - Extraction Tool: DRK95-16B
    - Insertion Tool: DAK95-16B

This document is proprietary to Onboard Systems Int'l. Disclosure or reproduction is not allowed. © 2025 Onboard Systems Int'l., all rights reserved.

Wire	3940A1P1 pin (LH)	3940A2P2 pin (RH)
INDICATOR POWER	h	P

Install the load weigh system circuit breaker per the following.

22. Install a terminal lug (P/N 410-240-00) on one end of the 2-foot long POWER wire supplied with wire harness P/N 270-310-00.
23. Attach the terminal lug to the load side of the 2-amp circuit breaker (P/N 440-022-00) with the supplied hardware and secure.
24. Remove and discard a plug button (at an available location) and install the 2-amp circuit breaker
25. Attach the circuit breaker to the bus bar with screw and lock-washer provided with the circuit breaker and secure.

Connect the circuit breaker to 3940A1J1 receptacle (for LH install) or 3940A2J2 receptacle (for RH install) per the following:

26. Route the POWER wire with the existing harness (W221) from the circuit breakers to the receptacle.
27. Trim the wire to length as needed.
28. Disassemble connector 3940A1J2 per section 3.6.
29. Crimp contacts P/N 410-921-00 (M39029/56-352) on the wire and insert into the receptacle per the following. The recommended tooling at this connector is as follows.
    - Crimping Tool: MH860 W/ 86-3 Die
    - Extraction Tool: DRK95-16B
    - Insertion Tool: DAK95-16B

Wire No.	3940A1P1 pin (LH)	3940A2P2 pin (RH)
LW1	h	P

30. Prep the mating surfaces of the circuit breaker panel and the pedestal structure for Bell Class R-II electrical bonding requirements.
31. Re-connect the connector 3940A1P2 to the receptacle.
32. Re-install the circuit breaker panel into the pedestal structure, re-using the hardware removed previously.
33. Verify the electrical bonding between the circuit breaker panel and the pedestal meets the Bell Class R-II bonding requirements.

This document is proprietary to Onboard Systems Int'l. Disclosure or reproduction is not allowed. © 2025 Onboard Systems Int'l., all rights reserved.

34. Route the BACKLIGHT COMMON and AIRCRAFT GROUND wires to ground stud 2400GC2 in the lower pedestal and trim to length as necessary.
35. Remove the existing nut and washers from the ground stud.
36. Crimp a terminal lug P/N 410-241-00 on each wire and place over ground stud and secure with the nut and washers.
37. Route the BACKLIGHT SIGNAL wire to the Lighting Module in the LH Nose Compartment.

NOTICE

The Indicator does function normally without the Backlight Control Voltage wired, but will just not dim with other instruments. Full brightness of the Indicator is overridden by the aircraft dimming control voltage (if connected).

Disconnect the connector 2430PS1P2 from the receptacle 2430PS1J2 and modify the connector per the following.

38. Disassemble connector 2430PS1P2 per section 3.6.
39. Locate wire BACKLIGHT SIGNAL at the connector and trim to length as necessary.
40. Crimp contact P/N 410-368-00 (M39029/58-360) on the wire and insert into the connector per the table below. The recommended tooling at this connector is as follows.
    - Crimping Tool: AFM8 W/ K42 Die
    - Extraction Tool: DRK95-22MB
    - Insertion Tool: DAK95-22MB

Wire	**2430PS1P2 pin**
BACKLIGHT SIGNAL	61 (5 volt)*
	25 (28 volt)*

The C-40 Indicator backlight can accommodate either 5 or 28 volts through a user selectable setting in its menu.

Connect wires from the C-40 connector to ground.

41. Route the BACKLIGHT COMMON and AIRCRAFT GROUND wires with existing harnesses to ground point 2400GC2 located on the lower pedestal.
42. Trim these wires to length as necessary to terminate at 2400GC2.

This document is proprietary to Onboard Systems Int'l. Disclosure or reproduction is not allowed. © 2025 Onboard Systems Int'l., all rights reserved.

43. Insert these 2 wires into terminal lug P/N 410-241-00 and crimp.
44. Secure the terminal lug to the 2400GC2 ground stud.

4.2.2 LH Harness Installation – 4296P13 to 4296J34

Locate the 6 conductor LOAD CELL wire of P/N 270-311-00 and terminate it at 4296P13 (for LH installation) per the following. If installing a kit for RH PIC, skip to the next section.

1. Disassemble the connector 4296P13 per section 3.6.
2. Strip the jacket of the 6-conductor load cell wire back 1.50" and trim the shield back 1.25" (leaving .25" of shield exposed).
3. Center the shield termination (P/N 410-199-00) over the exposed shield and shrink into place with heat gun.
4. Trim the lead of the shield termination to the length of the other wires and crimp contacts P/N 410-314-00 (M39029/58-363) on and insert wires into the connector per the following. The recommended tooling at this connector is as follows.
    - Crimping Tool: AFM8 W/ K43 Die
    - Extraction Tool: DRK95-20B
    - Insertion Tool: DAK95-20B

    Note: The WH/RED and WH/BLK wires of the LOAD CELL wire are not used.

LOAD CELL Wire	4296P13 pin
WH	H
WH/GN	J
WH/OR	K
WH/BLU	L
Shield	N

5. Re-assemble the connector 4296P13 per section 3.6.
6. Re-connect the connector 4296P13 to the mating receptacle.
7. Route the wire with existing harnesses from 4296P13 over to receptacle 4296J34 on the right side of the aircraft.
8. Trim the wire to length as needed to terminate to 4296J34.
9. Disconnect the connector 4296P34 from the receptacle 4296J34.
10. Remove the receptacle 4296J34 from its mounting position on the RH keel beam. Retain all parts and mounting hardware.

Connect the 6-conductor wire to receptacle 4296J34.

This document is proprietary to Onboard Systems Int'l. Disclosure or reproduction is not allowed. © 2025 Onboard Systems Int'l., all rights reserved.

11. Disassemble the receptacle 4296J34 per section 3.6.
12. Strip the jacket of the 6-conductor wire back 1.50" and trim the shield back 1.25" (leaving .25" of shield exposed).
13. Center the shield termination (P/N 410-199-00) over the exposed shield and shrink into place with heat gun.
14. Trim the lead of the shield termination to the length of the other wires and crimp contacts P/N 410-370-00 (M39029/56-348) on and insert the wires into the receptacle 4296J34 per the following table. The recommended tooling at this connector is as follows.
    - Crimping Tool: AFM8 W/ K40 Die
    - Extraction Tool: DRK95-22MB
    - Insertion Tool: DAK95-22MB

    Note: The WH/RED and WH/BLK wires of the LOAD CELL wire are not used.

LOAD CELL Wire	4296J34 pin
WH	1
WH/GN	2
WH/OR	3
WH/BLU	4
Shield	6

15. Prepare the mating surfaces of the receptacle 4296J34 and the bulkhead for Bell Class R-I electrical bonding requirements.
16. Re-install the receptacle on the bulkhead with the hardware removed previously and tighten.
17. Verify the electrical bonding meets the Bell Class R-I requirements.
18. Apply a fillet of sealant around the perimeter of the bonded area.

4.2.3 RH Harness Installation – LOAD CELL to 4296P8

Working from the connector bracket on the belly of the aircraft, install wire harness (P/N 270-312-00). This harness installs the same.

1. Mount the load cell connector to the designated LOAD CELL position on the Connector Bracket with four screws (P/N 510-700-00) and Perimeter Nut Plate (P/N 511-214-00).
2. Route the wire through the .75" wide slot created in the side-body panel previously and then forward with the existing harness to connector 4296P8.
3. Trim the wire to length as necessary to terminate it at connector 4296P8.

This document is proprietary to Onboard Systems Int'l. Disclosure or reproduction is not allowed. © 2025 Onboard Systems Int'l., all rights reserved.

4. Disassemble the connector 4296P8 per section 3.6.
5. Strip the jacket of the 6-conductor load cell wire back 1.50" and trim the shield back 1.25" (leaving .25" of shield exposed).
6. Center the shield termination (P/N 410-199-00) over the exposed shield and shrink into place with heat gun.
7. Trim the lead of the shield termination to the length of the other wires and crimp contacts P/N 410-314-00 (M39029/58-363) on and insert wires into the connector per the following table. The recommended tooling at this connector is as follows.
    - Crimping Tool: AFM8 W/ K43 Die
    - Extraction Tool: DRK95-20B
    - Insertion Tool: DAK95-20B

    Note: The WH/BLK and WH/RED wires are not used.

LOAD CELL Wire	4296P8 pin
WH	T
WH/GN	U
WH/OR	V
WH/BLU	m
Shield	z

8. Re-assemble the connector 4296P8 per section 3.6.
9. Re-connect the connector 4296P8 to the mating receptacle.

4.2.4 LH Harness Installation – LOAD CELL to 4296P34

Working from the connector bracket on the belly of the aircraft, install wire harness (P/N 270-312-00).

1. Mount the load cell connector to the designated LOAD CELL position on the Connector Bracket with four screws (P/N 510-700-00) and Perimeter Nut Plate (P/N 511-214-00).
2. Route the wire through the .75" wide slot created in the side-body panel previously and then forward with the existing harness to connector 4296P34 on the keel beam.
3. Trim the wire to length as necessary to terminate it at connector 4296P34.
4. Disassemble the connector 4296P34 per section 3.6.
5. Strip the jacket of the 6-conductor load cell wire back 1.50" and trim the shield back 1.25" (leaving .25" of shield exposed).

This document is proprietary to Onboard Systems Int'l. Disclosure or reproduction is not allowed. © 2025 Onboard Systems Int'l., all rights reserved.

6. Center the shield termination (P/N 410-199-00) over the exposed shield and shrink into place with heat gun.
7. Trim the lead of the shield termination to the length of the other wires and crimp contacts P/N 410-369-00 (M39029/58-360) on and insert wires into the connector per the following table. The recommended tooling at this connector is as follows.
    - Crimping Tool: AFM8 W/ K42 Die
    - Extraction Tool: DRK95-22MB
    - Insertion Tool: DAK95-22MB

    Note: The WH/BLK and WH/RED wires are not used.

LOAD CELL Wire	4296P34 pin
WH	1
WH/GN	2
WH/OR	3
WH/BLU	4
Shield	6

8. Re-assemble the connector 4296P34 per section 3.6.
9. Re-connect the connector 4296P34 to the mating receptacle.

This document is proprietary to Onboard Systems Int'l. Disclosure or reproduction is not allowed. © 2025 Onboard Systems Int'l., all rights reserved.

5.0 Removable Provisions Installation

5.1 Cargo Hook/Frame Assembly Installation

The removable provisions installation consists of attaching the Cargo Hook/ Frame Assembly to the four Lug Assemblies installed previously (or the Bell Lug Assemblies) and attaching the Fairing.

1. As a precaution, place a soft mat underneath the helicopter in the event the Frame Assembly falls during positioning to the belly.
2. Orient the Frame Assembly with the shorter arms to the right side of the aircraft (as shown below). The forward side is also indicated by the FWD decal on the top side frame.

Figure 5.1 Frame Orientation

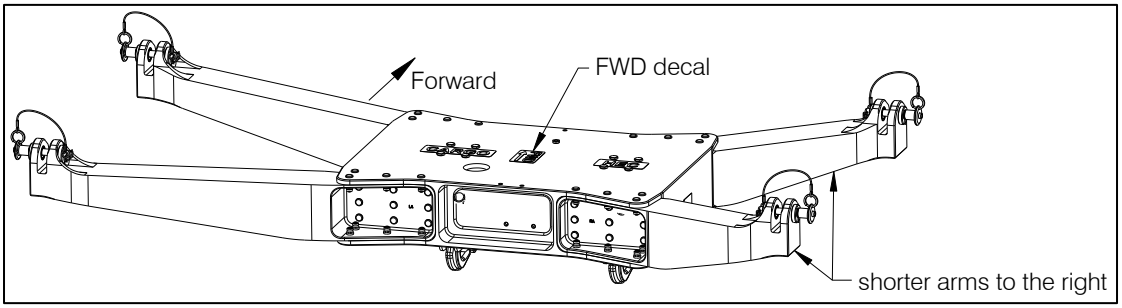

3. Remove the pre-assembled quick release pins from the four lugs of the Frame Assembly.
4. Rotate the eccentric bushings so the lines are down (as shown).

Figure 5.2 Eccentric Bushing Position

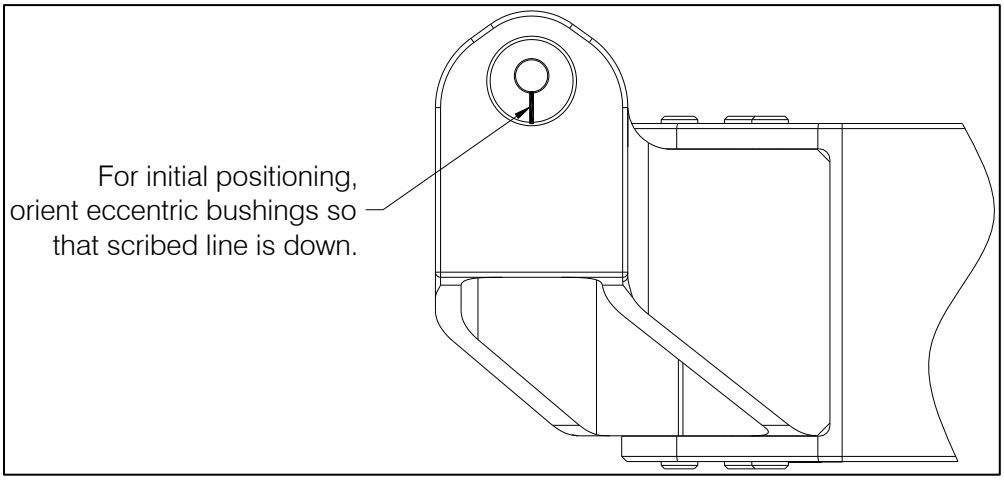

5. Apply a thin coating of Mobil Grease 28 or similar aerospace-grade grease to quick release pins prior to installation.

This document is proprietary to Onboard Systems Int'l. Disclosure or reproduction is not allowed. © 2025 Onboard Systems Int'l., all rights reserved.

6. With a person at each side, lift the frame upwards to the four lugs. Position the clevises of the forward arms over the lugs and align the eccentric bushings with the holes in the lugs and insert the quick release pins through.

Figure 5.3 Quick Release Pin

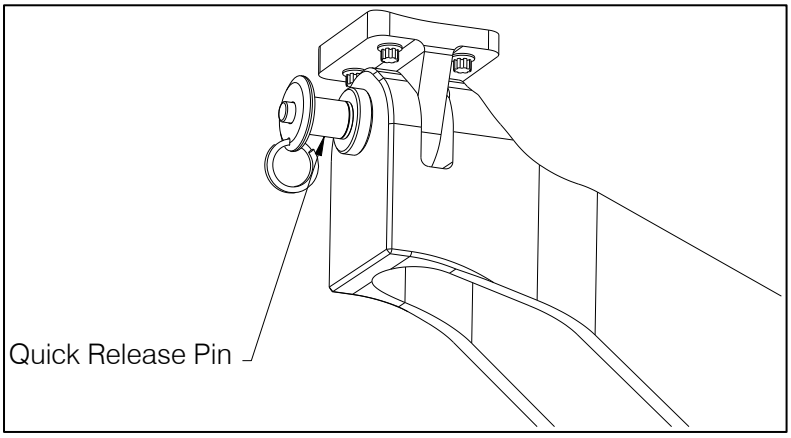

7. Secure each quick release pin by inserting the safety pin attached to the head of the quick release pin with a lanyard.
8. Route the electrical harness/hydraulic hose bundle forward and to the right over to the connector bracket and connect each connector to the respective connector on the bracket. This bundle will be routed through the slot in the Fairing Assembly when it is installed (in the next section).

CAUTION

The hydraulic release connectors and the hoses are labeled as CARGO HOOK for the primary cargo hook and HEC HOOK for the secondary cargo hook. Ensure the correct connection is made.

This document is proprietary to Onboard Systems Int'l. Disclosure or reproduction is not allowed. © 2025 Onboard Systems Int'l., all rights reserved.

5.2 Fairing Assembly Installation

The Fairing Assembly (P/N 232-894-00) is installed just forward of the Cargo Hook/Frame Assembly, using the mounting provisions installed previously.

1. Position the Fairing Assembly over the mounting Brackets while guiding the Drain Tube through the hole in the contoured surface.
2. Move the Fairing Assembly aft as necessary to engage the outer forward flanges with the Retainers and then slide it forward to capture the flanges underneath the Retainers.
3. Align the holes on the left and right sides of the Fairing Assembly with the holes in the Brackets and insert the attached ¼ turn fasteners and rotate to engage the ¼ turn receptacles in the Brackets.
4. At the center forward flange, engage the two ¼ turn fasteners* with the receptacles installed previously in the fuel sump cover.

   *If necessary for proper engagement, replace these two fasteners with the included alternative ¼ turn fasteners (P/N 511-339-00) that provide a longer grip length.

5.3 Placard Installation

1. Install the External Load Limit Placard (P/N 215-456-00) on the belly of the helicopter, adjacent to the cargo hook beam.
2. Install the "HEC HOOK" decal above and "PWR" decal (P/N 215-472-00) below the circuit breaker installed for the HEC Hook.
3. If the load weigh system was installed and the circuit breaker is not identified, install the LOAD WEIGH decal (P/N 215-417-00) adjacent to the circuit breaker or mark otherwise with lettering to match the adjacent circuit breaker labeling.

This document is proprietary to Onboard Systems Int'l. Disclosure or reproduction is not allowed. © 2025 Onboard Systems Int'l., all rights reserved.

6.0 Load Weigh Upgrade Kit Installation

The Load Weigh Upgrade Kit (P/N 200-492-00 for LH PIC or P/N 200-492-01 for RH PIC) provides for adding a load weigh system to an existing Dual Cargo Hook System that was originally purchased without this option. It includes the C-40 Indicator and its mounting provisions, pin load cell at the cargo hook, and internal wire harnesses to connect the C-40 Indicator to the pin load cell and aircraft power and ground.

Install this kit per the following instructions.

1. Install the C-40 Indicator and internal harnesses (P/Ns 270-310-00, 270-311-00, and 270-312-00) per Section 4.0.
2. Remove the attach bolt at the primary Cargo Hook and replace it with the pin load cell per the following section.

6.1 Pin Load Cell Installation

1. Remove the spiral wrap from around the harness that is routed from the Cargo Hook to the cushioned loop clamp.
2. Remove the spiral wrap and cable tie around the bundle of harnesses and hoses starting from where they exit the frame slot.
3. To re-assemble with the correct length of the loop of the hoses and harnesses from the Cargo Hook and HEC Hook, mark the point (with Sharpie or masking tape) at which the harnesses and the HEC Hose enter the large cushioned loop clamp.
4. Remove the large cushioned loop clamp (MS21919DG10).
5. Cut cotter pin and remove nut, washers, and attach bolt from the Cargo Hook.
6. Re-assemble the cargo hook onto the attach point on the frame, using the Pin Load Cell (in place of the attach bolt) and omitting the washer that was under the attach bolt head.

This document is proprietary to Onboard Systems Int'l. Disclosure or reproduction is not allowed. © 2025 Onboard Systems Int'l., all rights reserved.

Figure 6.1 Pin Load Cell Attachment Hardware

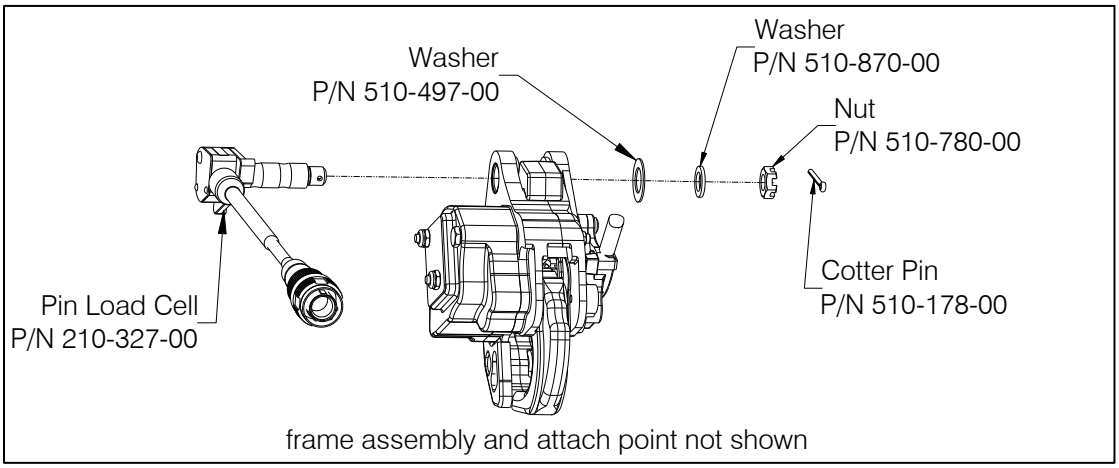

7. Route the Pin Load Cell harness under the slave cylinder hose as shown below.

Figure 6.2 Pin Load Cell Harness Routing

8. Re-assemble the hoses and harnesses through the cushioned loop clamp, setting the loop at the marked length and routing the pin load cell harness with the electrical harness (as shown below).

This document is proprietary to Onboard Systems Int'l. Disclosure or reproduction is not allowed. © 2025 Onboard Systems Int'l., all rights reserved.

9. Tighten the nut securing the loop clamp to 30-40 in-lb.
10. Re-wrap with spiral wrap inside the frame (as shown below) and re-wrap the bundle starting at the exit point from the frame.
11. Swing the cargo hooks throughout their ranges of motion to ensure that the hose and harnesses have enough slack to allow full swing of the cargo hooks without being pulled tight or otherwise damaged. The hoses and harnesses must not be the stops that prevent the cargo hooks from swinging freely in all directions throughout the range of motions as provided by the physical stops built into their attachment means.

Figure 6.3 Hose and Harness Routing – Complete

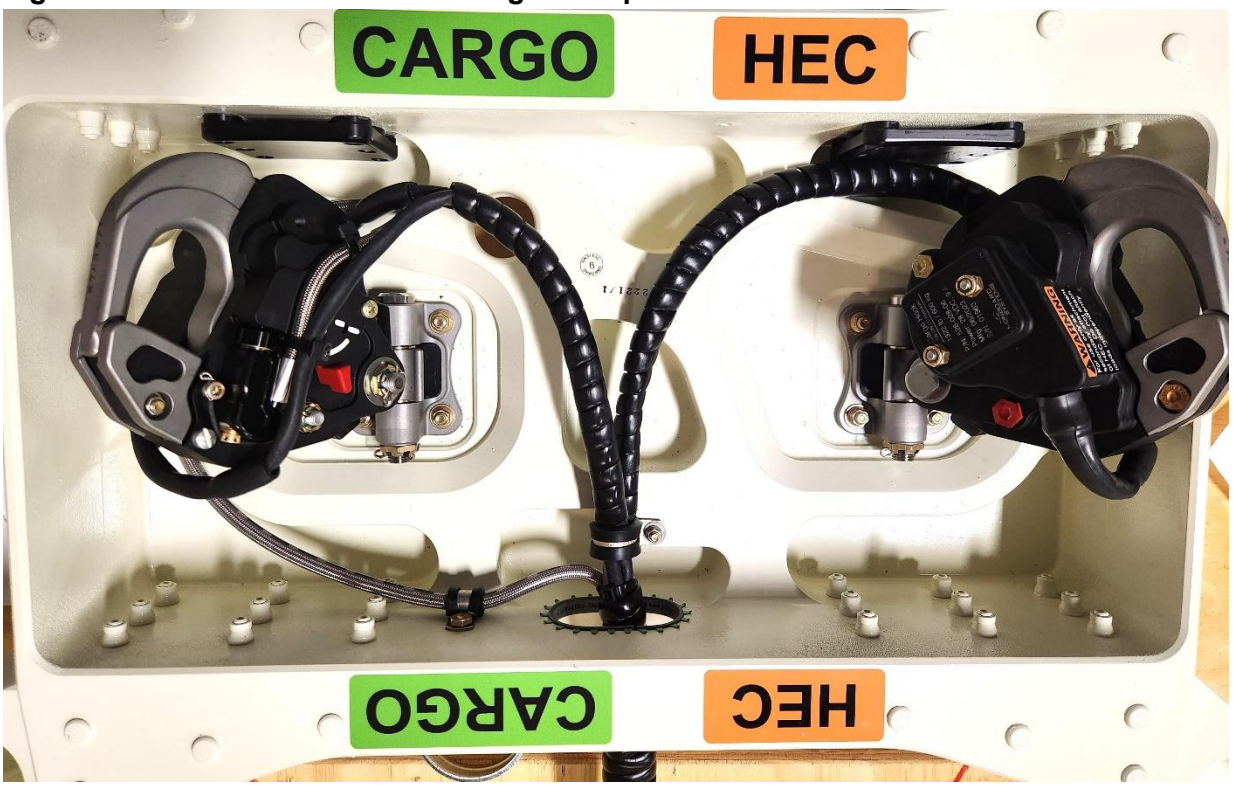

This document is proprietary to Onboard Systems Int'l. Disclosure or reproduction is not allowed. © 2025 Onboard Systems Int'l., all rights reserved.

7.0 Hydraulic System Fill and Bleed Procedure

If there is a need to fill and/or bleed the system, follow the procedures listed below. Proper bleeding is critical to the operation of the hydraulic release system. An improperly bled system will not release the cargo hook mechanism.

Filling and bleeding requires two persons, one to inject hydraulic fluid through the system and the other to observe the master cylinder reservoir. This process is to be repeated for each cargo hook's hydraulic release system.

A bleed kit (P/N 212-014-02) is provided with each cargo hook kit. This kit consists of 2 oz of MIL-PRF-87257 hydraulic fluid, a syringe, a female barb fitting, a length of PVC tubing, and a bleed adapter fitting. The bleed procedure is as follows.

1. Assemble the bleed kit components by press fitting each component together as shown.

Figure 7.1 Hydraulic Hook Bleed Kit

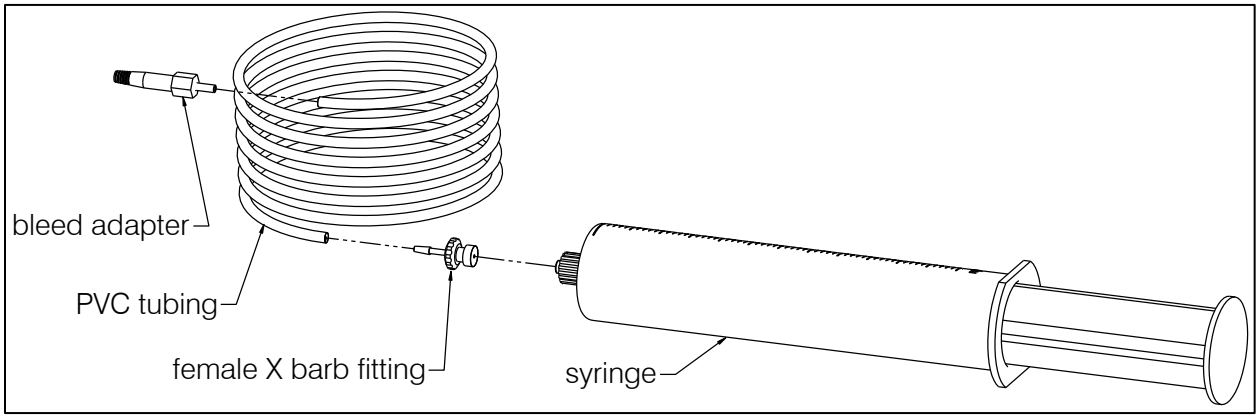

2. Place an absorbent towel under the master cylinder.

NOTICE

Use best shop practices to keep foreign material out of the hydraulic system. FOD will plug orifices, damage seals and/or scratch sealing surfaces necessitating system rebuild. Use only clean hydraulic fluid from sealed containers.

3. Remove screws, Reservoir Lid, Reservoir Glass, shipping seal (not shown), and Baffle Plate from the master cylinder reservoirs as shown in Figure 7.2. Discard shipping seal.

This document is proprietary to Onboard Systems Int'l. Disclosure or reproduction is not allowed. © 2025 Onboard Systems Int'l., all rights reserved.

CAUTION

FRAGILE - Reservoir Glass is made from glass (not polycarbonate as with other master cylinder designs from Onboard Systems). Handle with care.

Figure 7.2 Reservoir Lid Removal

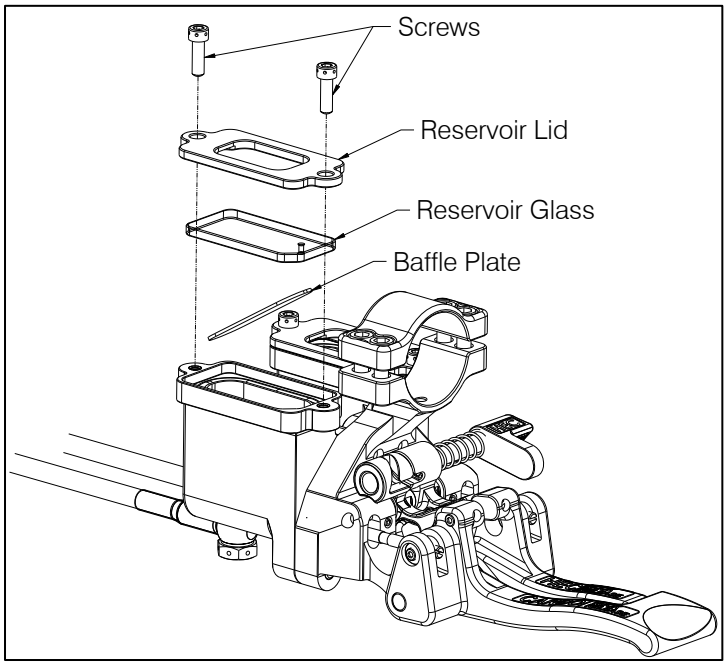

4. Remove the bleed screw, thread seal washer, and washers from the slave cylinder, see Figure 7.3.

Figure 7.3 Bleed Screw Removal

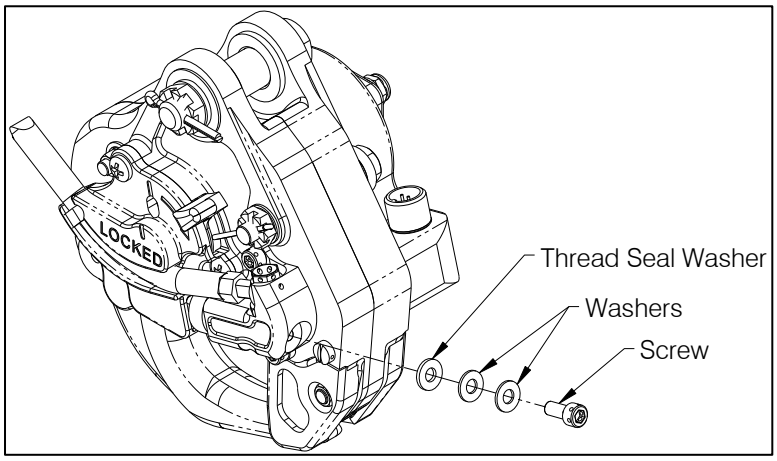

This document is proprietary to Onboard Systems Int'l. Disclosure or reproduction is not allowed. © 2025 Onboard Systems Int'l., all rights reserved.

5. Fill the syringe with approximately 35 cc of hydraulic fluid and purge any remaining air in the syringe and tubing. Screw the end of the bleed adapter into the screw hole on the slave cylinder to create a tight seal. See Figure 7.4.
6. While observing the reservoir, **slowly** push on the syringe plunger to force fluid through the slave cylinder, hydraulic hose, and up to the master cylinder reservoir. There will be some resistance during filling—this is normal.

CAUTION

Injecting the fluid into the system too rapidly may cause the fluid to spray up and out of the master cylinder reservoir. Wear safety glasses when observing fluid reservoir while filling.

Figure 7.4 Injecting Hydraulic Fluid

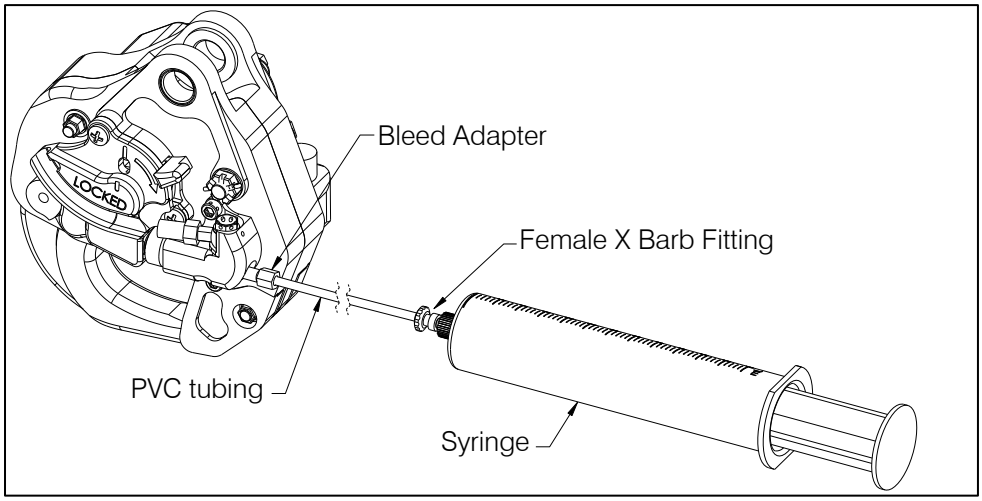

7. Continue to force fluid into the master cylinder reservoir until the reservoir is approximately half full.

NOTICE

If bleeding an already filled system, you may need to draw fluid from the master cylinder reservoir during this step to prevent overflow.

8. Prepare the thread seal washer, washer and screw for quick assembly into the bleed screw hole when the adapter is removed as fluid will began to drain from the system.

This document is proprietary to Onboard Systems Int'l. Disclosure or reproduction is not allowed. © 2025 Onboard Systems Int'l., all rights reserved.

9. Remove the bleed adapter from the screw hole. Re-install the Thread Seal Washer, washers, and screw.
10. Repeat steps 4 through 9 with the other cargo hook.
11. Allow the system to rest for several minutes. This will allow any air to rise through the system
12. Very **slowly** pull each release lever on the master cylinder and watch for bubbles. If bubbles are observed rising within the reservoir, continue to slowly cycle the lever until there are no more. Actuating the lever releases air trapped within the master cylinder.

⚠ CAUTION

Pull the lever very slowly! When the reservoir is not baffled and capped, a hard pull will cause fluid to erupt over the edge of the reservoir.

13. Check the system for air by actuating the lever firmly until it bottoms out. Check the push rod position (see Figure 7.5). If some of the green area on the push rod is visible, proceed to step 13. If some of the green on the push rod is not visible with the lever completely pulled, the system has too much air in it and needs further bleeding. To do this, repeat steps 5 – 11.

This document is proprietary to Onboard Systems Int'l. Disclosure or reproduction is not allowed. © 2025 Onboard Systems Int'l., all rights reserved.

Figure 7.5 Checking System for Air

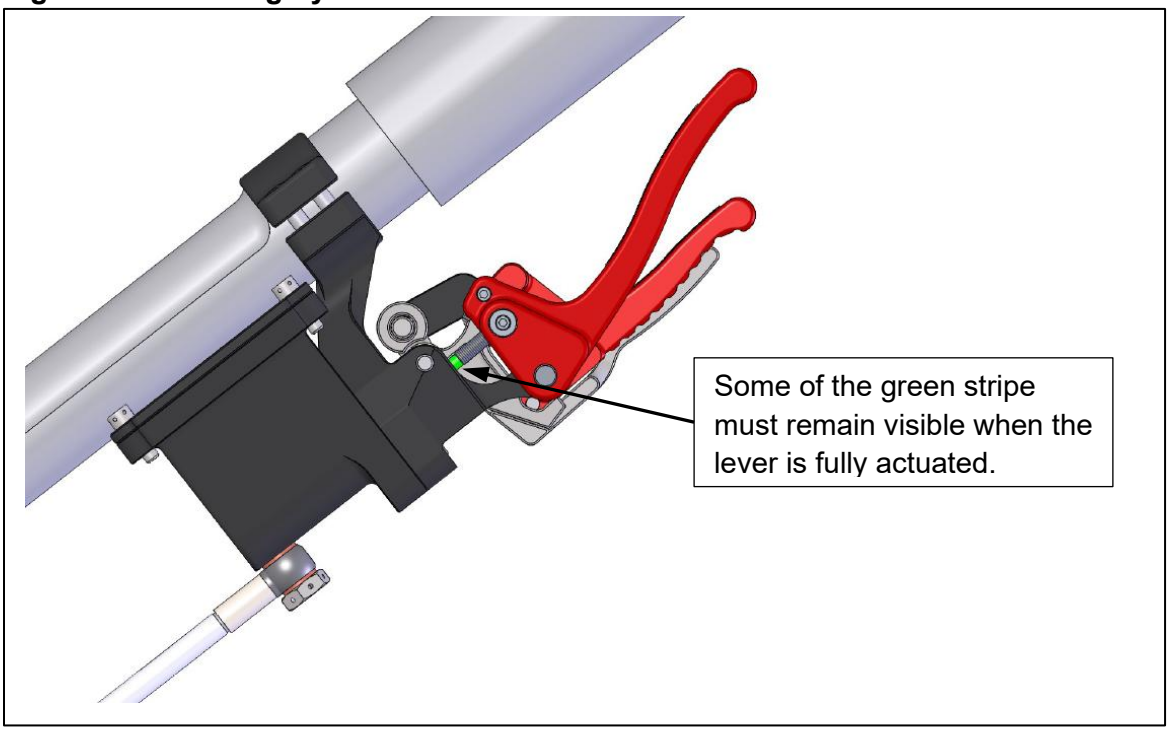

14. After each release system is properly bled, re-install the baffle plates and verify that the reservoirs are adequately filled with hydraulic fluid. Fluid levels should be within the Min/Max ovals on the baffle plates. Add or draw off fluid as necessary.

Figure 7.6 Fluid Level

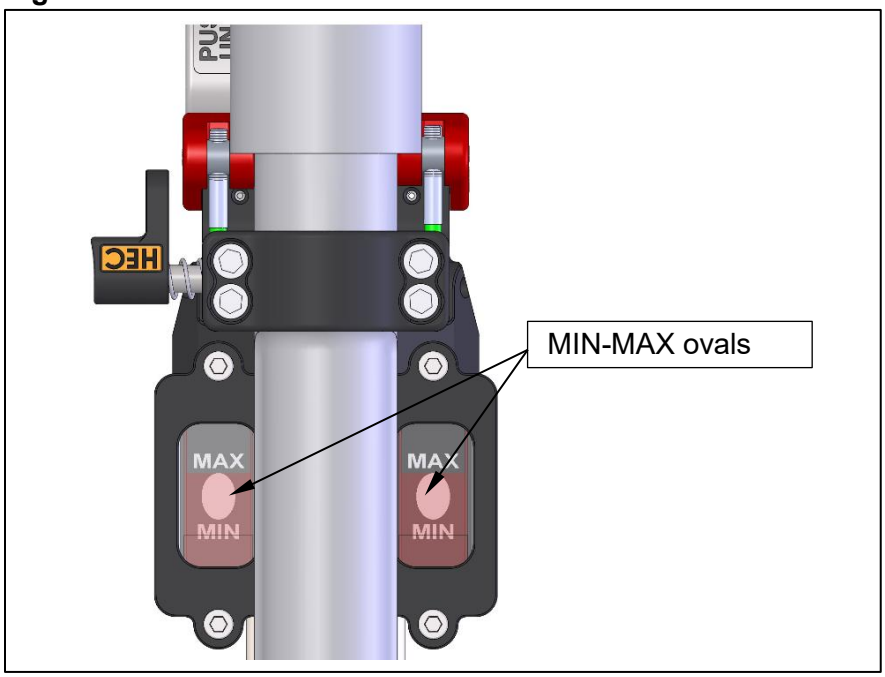

This document is proprietary to Onboard Systems Int'l. Disclosure or reproduction is not allowed. © 2025 Onboard Systems Int'l., all rights reserved.

15. Check the system for proper operation. Fully actuate each release lever. The cargo hooks must open, and the levers must have a firm feel.

NOTICE

Before re-assembling the lids onto the reservoirs, remove any excess hydraulic fluid from the O-ring grooves and around the grooves with a lint free swab. The exterior of the reservoirs can be cleaned with isopropyl alcohol and a clean cloth.

16. Place the Reservoir Glass and the Reservoir Lid over the reservoir. The Reservoir Glass is "keyed" so it can only be installed in one orientation.
17. Re-assemble the two screws over each lid and tighten to 12-15 in-lb.
18. Secure each pair of lid screws with safety wire.

Figure 7.7 Glass and Lid Re-Assembly

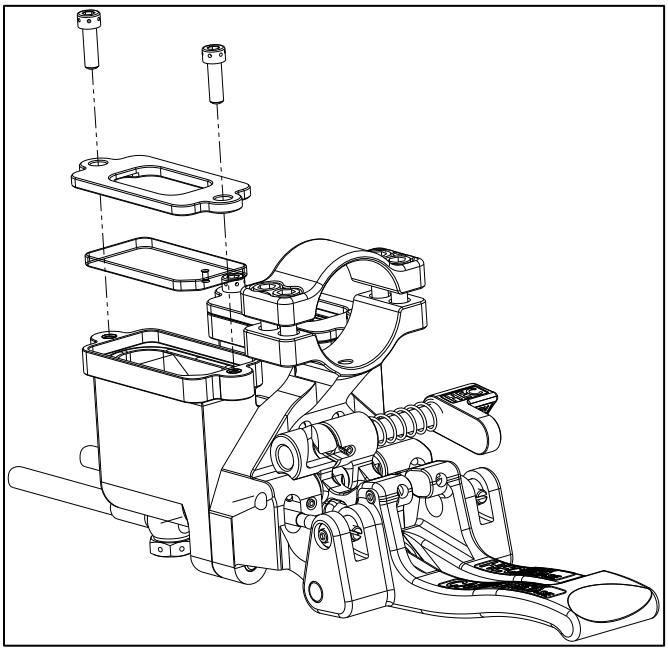

19. Disassemble and thoroughly clean the bleed kit with isopropyl alcohol. Allow it to dry. Not cleaning the syringe will render it unusable. Re-assemble and store for next use.

This document is proprietary to Onboard Systems Int'l. Disclosure or reproduction is not allowed. © 2025 Onboard Systems Int'l., all rights reserved.

8.0 Long Line Kit

The Long Line Kit (P/N 200-490-XX) includes the components shown in the figure below. The Y-rope is the only component of the long line kit that is required to be used with the dual cargo hook system as it is designed to provide a controlled interface with the cargo hooks. For the components below the Y-rope (carabiner to lanyard), an alternative configuration or components approved by the local Aviation Authority may be used.

Figure 8.1 Long Line Kit P/N 200-490 Series

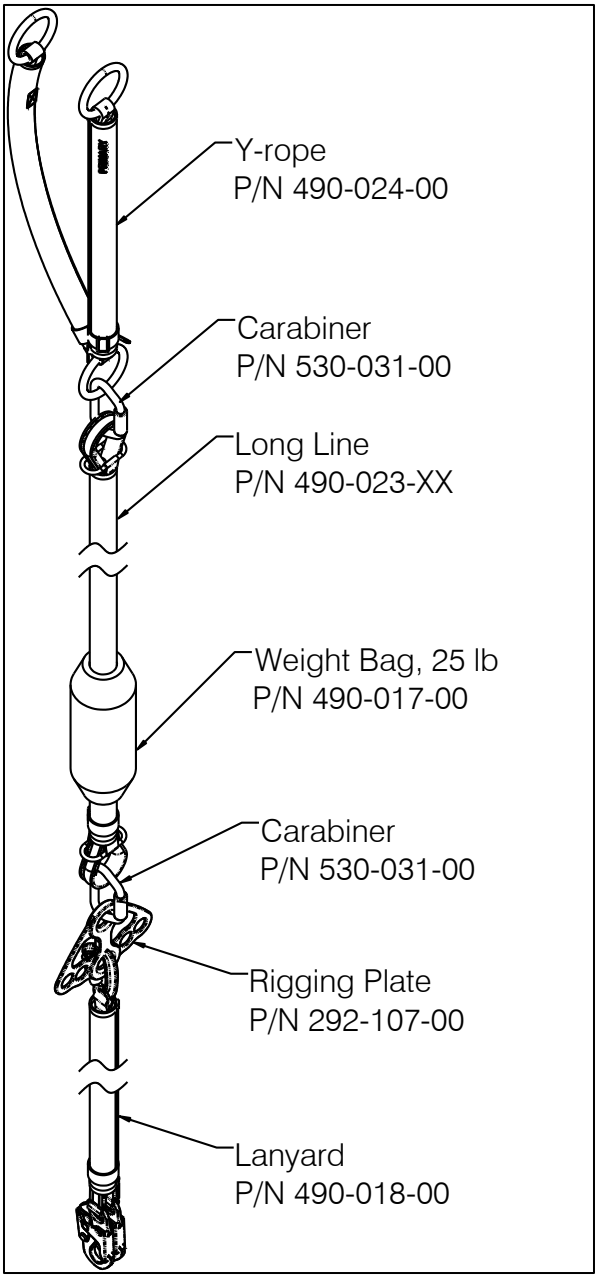

This document is proprietary to Onboard Systems Int'l. Disclosure or reproduction is not allowed. © 2025 Onboard Systems Int'l., all rights reserved.

Connect one end of the long line to the load ring that joins the two legs of the Y-rope with carabiner P/N 530-031-00 (shown in Figure 8.1).

WARNING

With this configuration use only the supplied carabiners, P/N 530-031-00. Do not substitute.

Connect the single lug end of the Rigging Plate (P/N 292-107-00) to the long line through the other carabiner P/N 530-031-00 provided with the kit.

The lanyard provides a single carabiner at one end to connect to one of the lower Rigging Plate holes and two snap hooks at the other end to connect to a human harness. The lanyard is rated for 310 lbs. Multiple lanyards may be connected to the Rigging Plate (see section 8.1.1 below for Rigging Plate loading limitations).

Attach the 25 lb weight bag to the lower end of the long line, this specific weight bag is optional with the 200-490-XX kit configuration but a minimum of 10 lbs is required at the lower end of the long line to minimize risk of an unloaded long line trailing into tail rotor (refer to RFMS for limitation and operational procedures).

NOTICE

Refer to the Long Line User's Manual provided for additional information regarding the ropes and instructions for use.

8.1.1 Rigging Plate

The Rigging Plate (P/N 292-107-00) provides an upper 1.25-inch diameter hole to connect to the long line through the carabiner, a lower 1.25-inch hole with a working load limit (WLL) of 1322 lbs and four lower 1.00 inch diameter holes each rated for a WLL of 310 lbs (1322 lbs remains the overall limit) for connecting a lanyard or multiple lanyards for carrying more than one person. Figure 8.2 provides some examples of Rigging Plate loading.

- Example "A" shows the maximum load at each of the 1.00-inch holes.
- Example "B" shows a combination of the maximum load at each of the two outer 1.00 inch holes and the remainder at the center lug to reach 1322 lb. maximum.

This document is proprietary to Onboard Systems Int'l. Disclosure or reproduction is not allowed. © 2025 Onboard Systems Int'l., all rights reserved.

- Example "C" shows a single load of 1322 lbs. maximum.

In all cases distribute the loads about the center of the Rigging Plate as much as possible. If a single load is attached to the Rigging Plate use the center lug (as shown).

NOTICE

Any combination of loads may be applied through the lower five holes as long as the 310 lb load is not exceeded at the 1.00 inch holes and the 1322 lb overall limit is not exceeded.

Figure 8.2 Rigging Plate Loading Examples (1322 lb maximum shown)

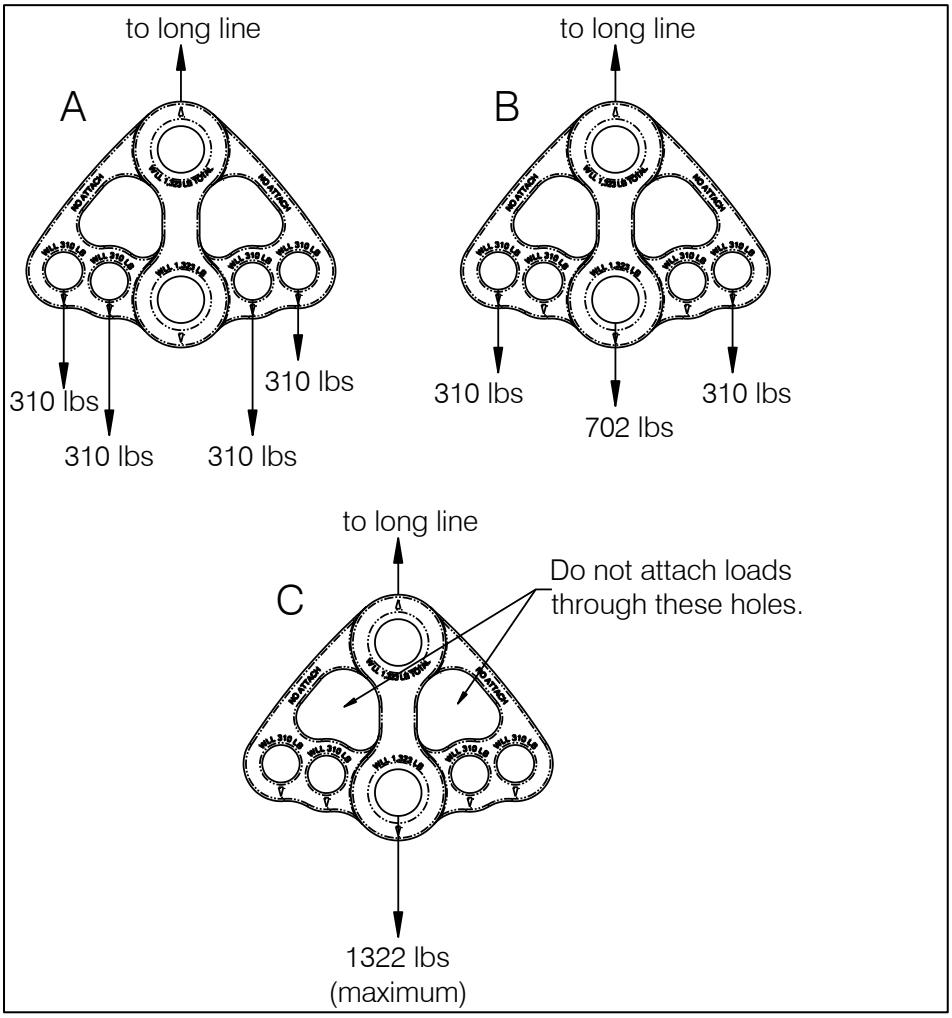

This document is proprietary to Onboard Systems Int'l. Disclosure or reproduction is not allowed. © 2025 Onboard Systems Int'l., all rights reserved.

9.0 Installation Check-out

9.1 Functional Check

1. Power up the aircraft electrical system, press the release switch for the primary Cargo Hook, and verify that the Cargo Hook opens with no load on it.
2. Press the release switch for the HEC Hook and verify the HEC Hook opens with no load on it.
3. Return each cargo hook to the closed position and verify that each cargo hook's lock indicator aligns with the lines on the manual release cover.

Figure 9.1 Hook Lock Indicator

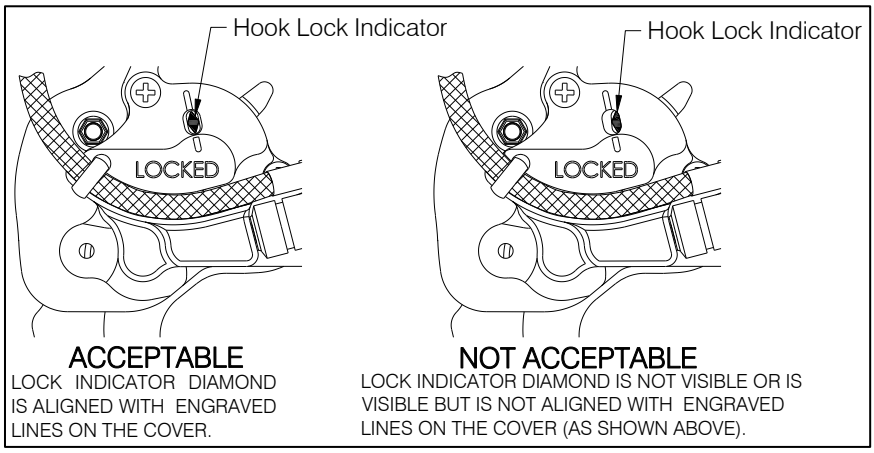

The dual release levers on the collective are protected by a Lockout Lever against inadvertent release and designed to be released sequentially in the HEC configuration. The sequential design is such that the action of pulling the secondary release lever unlocks the primary release lever (in addition to releasing the HEC Hook). Check the function per the following.

4. Set the mode selector lever to HEC mode.

   For HEC operations, the orange HEC decal on the selector lever is oriented up as shown below. To switch from NON-HEC to HEC, push the lever to the right, rotate it forward until it stops and allow the spring to push it outward.

This document is proprietary to Onboard Systems Int'l. Disclosure or reproduction is not allowed. © 2025 Onboard Systems Int'l., all rights reserved.

Figure 9.2 HEC Mode

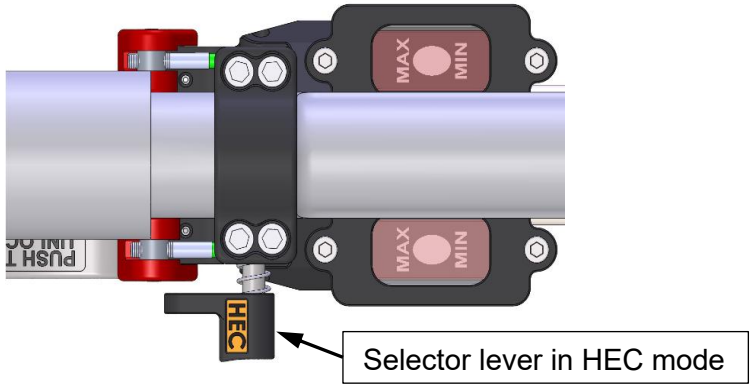

5. Unlock the release levers on the collective by pushing down on the Lockout Lever.
6. Pull the HEC HOOK RELEASE lever and verify the HEC Hook opens with no load on it (pulling the HEC HOOK RELEASE lever should unlock the CARGO HOOK RELEASE lever)
7. Pull the CARGO HOOK RELEASE lever and verify the primary cargo hook opens with no load on it.
8. Refer to the documentation provided for the long line kit components for initial inspection and familiarization with the care, handling, and recurring inspection of the rope materials.
9. If the long line kit's Y-rope, long line, and/or lanyard are being placed into service at this time, record the Service Entry Date on the ID tag of each component and record in log book.

   If these components are not to be placed into service at this time, store the components in a protected environment free from mechanical, environmental, ultraviolet, and temperature damage (refer to rope manufacturer's instructions provided).

NOTICE

The Y-rope (P/N 490-024-00), Long Line (P/N 490-015-XX), and Lanyard (P/N 490-018-00) must be retired at four (4) years after entry into service. Refer to ICA 123-056-00. Enter the service entry date on the applicable ID tag on the component.

This document is proprietary to Onboard Systems Int'l. Disclosure or reproduction is not allowed. © 2025 Onboard Systems Int'l., all rights reserved.

If the load weigh system was installed:

10. Power on the Load Weigh System. On startup the C-40 Indicator will display an information screen while performing a brief self-diagnostic routine and then display the load screen. Set the Installation Zero for the installation per the instructions contained in C-40 Indicator's Owner's Manual 120-152-00.
11. In the Settings menu adjust units (lb or kg), brightness of the display, maximum load, and other settings as preferred (refer to the C-40 Indicator Owner's Manual 120-152-00 for detailed instructions). One setting that must be set properly to function is the backlight voltage. If the wire for the backlight was connected the backlight voltage must be set to the aircraft circuit voltage (5 VDC or 28 VDC).

This document is proprietary to Onboard Systems Int'l. Disclosure or reproduction is not allowed. © 2025 Onboard Systems Int'l., all rights reserved.

9.2 Component Weights

The weights and CGs of the Removable and Fixed Provisions Kit of the complete Dual Cargo Hook System are listed below. See Table 9.3 for the weights of the Fixed Provisions Retrofit Kits. When performing weight and balance calculations remember to deduct the weight of any components removed or not installed.

Table 9.1 Dual Cargo Hook System Weight and CGs

Item	Weight Lbs. (kg)	Long. Arm (in.)	Lat. Arm (in.)
Removable Provisions Kits 200-486-00 and 200-486-01			
Cargo Hook Frame Assembly*	53.0 (24.0)	225.0	2.7 (RBL)
Fairing Assembly	8.9 (4.0)	210.0	0.0
Total	**61.9 (28.0)**	223.0	2.3 (RBL)
Fixed Provisions Kits 200-485-00, 200-485-01, 200-485-02, 200-485-03			
Lug Assemblies/Keel Beam Fittings & Hardware	6.5 (2.95)	225.0	0.0
Dual Master Cylinder w/ Plumbing and supporting hardware	3.5 (1.6)	-	-
Electrical Release Wiring Installation (including supporting brackets, mounting plates, etc.)	5.5 (2.5)	-	-
Load Weigh Wiring Installation	3.0 (1.4)	-	-
C-40 Indicator	0.55 (0.25)	-	-
C-40 Indicator Bracket	0.25 (0.11)	-	-
w/ Load Weigh (-00, -01)	**19.3 (8.7)**	-	-
w/o Load Weigh (-02, -03)	**15.5 (7.0)**	-	-
Dual Cargo Hook System (Total) 200-483-00, 200-483-01, 200-483-02, 200-483-03			
w/ Load Weigh (-00, -01)	**81.2 (36.8)**	-	-
w/o Load Weigh (-02, -03)	**77.4 (35.1)**	-	-

This document is proprietary to Onboard Systems Int'l. Disclosure or reproduction is not allowed. © 2025 Onboard Systems Int'l., all rights reserved.

Table 9.2 Retrofit Fixed Provisions Kit Weights

Item	Weight Lbs. (kg)
Fixed Provisions Retrofit Kit 200-493-00, 200-493-01, 200-493-02, 200-493-03	
Dual Master Cylinder w/ Plumbing and supporting hardware	3.5 (1.6)
Load Weigh Wiring Installation	3.0 (1.4)
C-40 Indicator	0.55 (0.25)
C-40 Indicator Bracket	0.25 (0.11)
Total w/ Load Weigh (200-493-00, 200-493-01)	**7.3 (3.3)**
Total w/o Load Weigh (200-493-02, 200-493-03)	**3.5 (1.6)**
Fixed Provisions Retrofit Kit 200-494-00, 200-494-01, 200-494-02, 200-494-03	
Dual Master Cylinder w/ Plumbing and supporting hardware	3.5 (1.6)
Electrical Release Wiring Installation (including supporting brackets, mounting plates, etc.)	5.5 (2.5)
Load Weigh Wiring Installation	3.0 (1.4)
C-40 Indicator	0.55 (0.25)
C-40 Indicator Bracket	0.25 (0.11)
Total w/ Load Weigh (200-494-00, 200-494-01)	**12.8 (5.8)**
Total w/o Load Weigh (200-494-02, 200-494-03)	**9.0 (4.1)**

*Includes cargo hooks and support frame.

**Depends on RH or LH controls installation, Dual Master Cylinder is 1.6 lbs. and is mounted to collective, remaining weight is plumbing assembly which is routed from Dual Master Cylinder to Connector Bracket.

This document is proprietary to Onboard Systems Int'l. Disclosure or reproduction is not allowed. © 2025 Onboard Systems Int'l., all rights reserved.

Table 9.3 Long Line Kit P/N 200-490-10 Weights

Item	Weight Lbs. (kg)
Y-rope (P/N 490-024-00)	3.6 (1.63)
Carabiner (P/N 530-031-00) Qty 2	0.7 (0.32)
Rigging Plate (P/N 292-107-00)	1.75 (0.79)
Long Line, 100 ft (P/N 490-023-10)	16.05 (7.28)
Weight Bag (P/N 490-017-00)	27.10 (12.30)
Lanyard (P/N 490-018-00)	3.25 (1.47)
Total Kit Weight	**52.5 (23.8)**

9.3 Paperwork

In the US, fill in FAA form 337 for the initial installation. This procedure may vary in different countries. Make the appropriate aircraft log book entry. Insert the Rotorcraft Flight Manual Supplement P/N 121-076-00 into the Rotorcraft Flight Manual.

This document is proprietary to Onboard Systems Int'l. Disclosure or reproduction is not allowed. © 2025 Onboard Systems Int'l., all rights reserved.

10.0 Maintenance

Refer to the Instructions for Continued Airworthiness (ICA) manual 123-056-00 for maintenance of the dual cargo hook system and Component Maintenance Manual 122-015-00 for maintenance specific to the cargo hooks.

11.0 Instructions for Returning Equipment to the Factory

If an Onboard Systems product must be returned to the factory for any reason (including returns, service, repairs, overhaul, etc.) obtain an RMA number before shipping your return.

NOTICE

An RMA number is required for all equipment returns.

To obtain an RMA, please use one of the listed methods.

- Contact Technical Support by phone or e-mail (Techhelp@OnboardSystems.com).
- Generate an RMA number at our website: http://www.onboardsystems.com/rma.php

After you have obtained the RMA number, please be sure to:

- Package the component carefully to ensure safe transit.
- Write the RMA number on the outside of the box or on the mailing label.
- Include the RMA number and reason for the return on your purchase or work order.
- Include your name, address, phone and fax number and email (as applicable).
- Return the components freight, cartage, insurance and customs prepaid to:

  Onboard Systems International, LLC
  13915 NW 3rd Court
  Vancouver, Washington 98685
  USA
  Phone: 360-546-3072

This document is proprietary to Onboard Systems Int'l. Disclosure or reproduction is not allowed. © 2025 Onboard Systems Int'l., all rights reserved.

12.0 Cargo Release Electrical Schematic

Figure 12.1 Cargo Release Schematic (1 of 3)

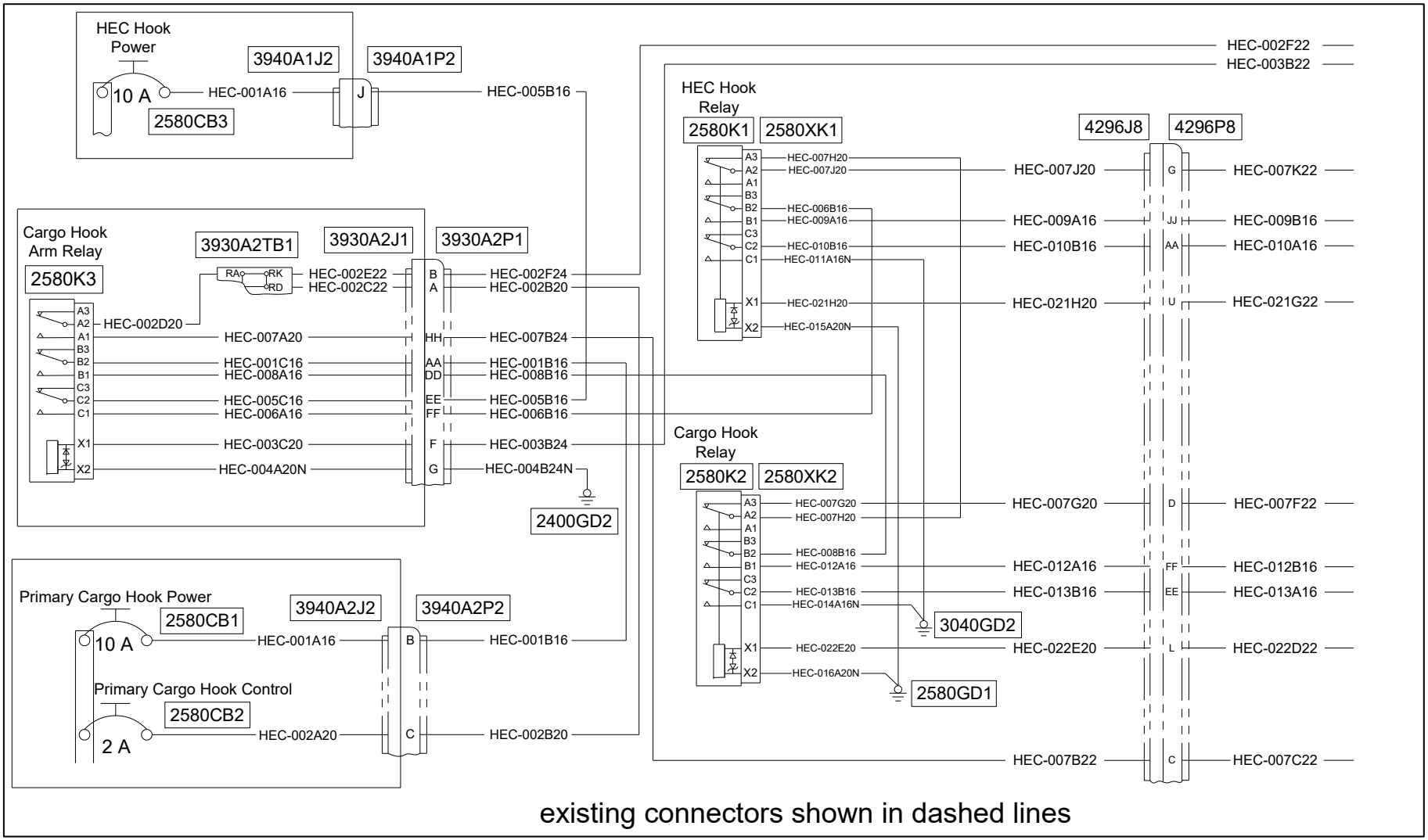

This document is proprietary to Onboard Systems Int'l. Disclosure or reproduction is not allowed. © 2025 Onboard Systems Int'l., all rights reserved.

Figure 12.1 Cargo Release Schematic (2 of 3)

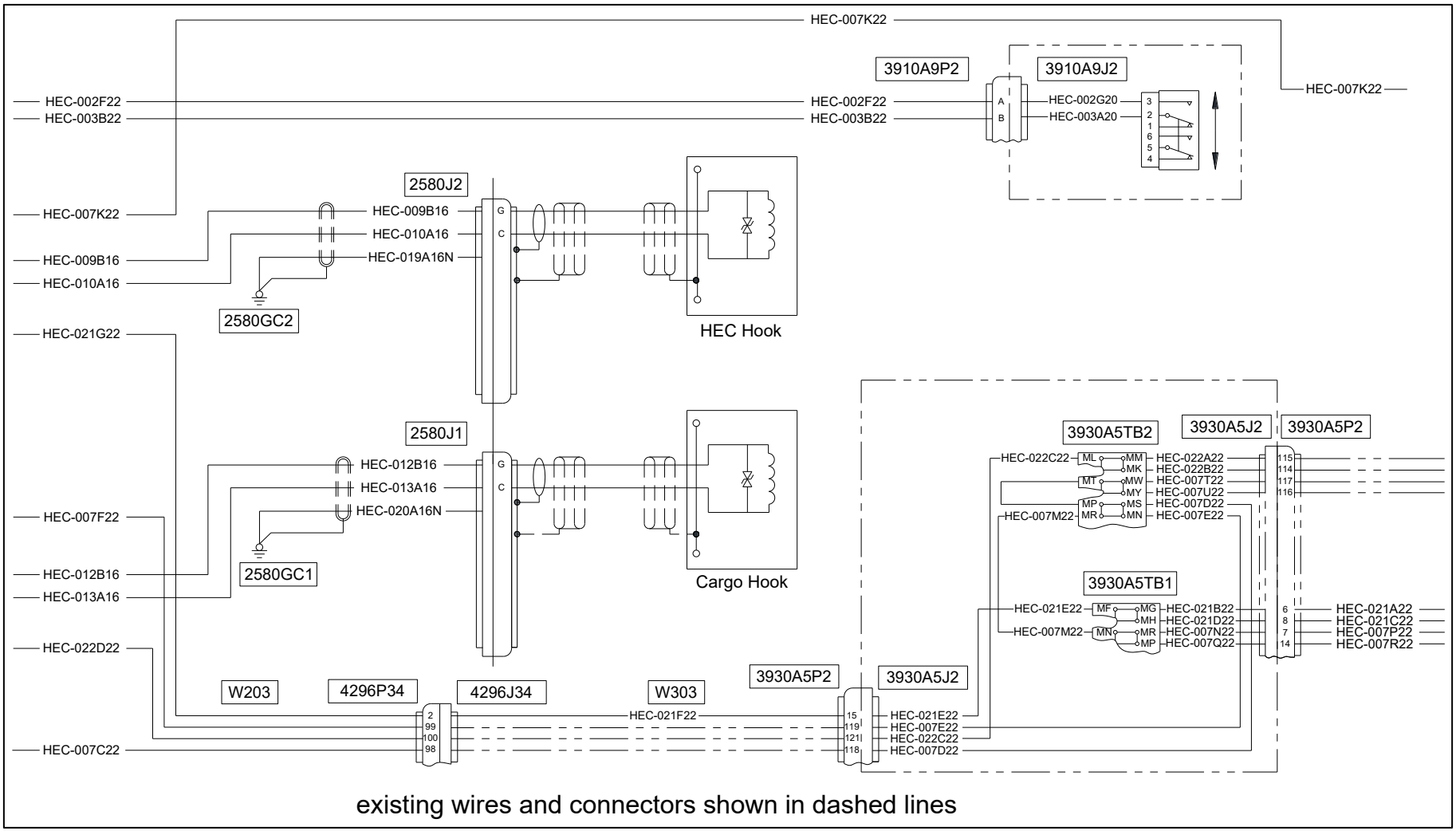

This document is proprietary to Onboard Systems Int'l. Disclosure or reproduction is not allowed. © 2025 Onboard Systems Int'l., all rights reserved.

Figure 12.1 Cargo Release Schematic (3 of 3)

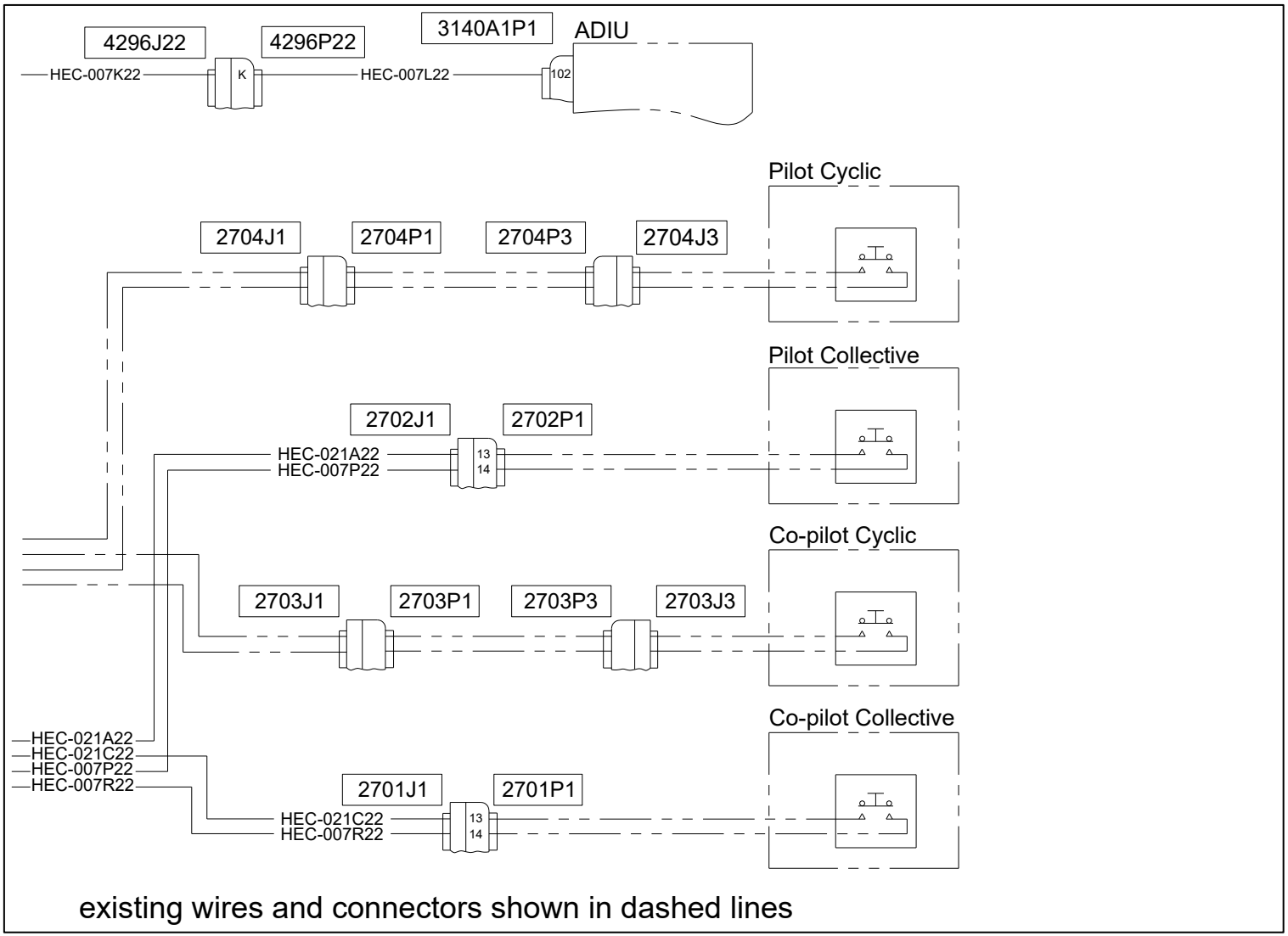

This document is proprietary to Onboard Systems Int'l. Disclosure or reproduction is not allowed. © 2025 Onboard Systems Int'l., all rights reserved.

13.0 Frame Support

As an aid in supporting the Frame Assembly for installation of the hardpoints and for removal and re-installation of the Frame Assembly, fabrication of a Frame Support is recommended. A recommended design that has been successfully used is shown below. This design positions the 2 x 4 supports in the correct location to not interfere with the cargo hooks and uses neoprene strips to prevent scratching of the frame.

Figure 13.1 Recommended Frame Support Construction

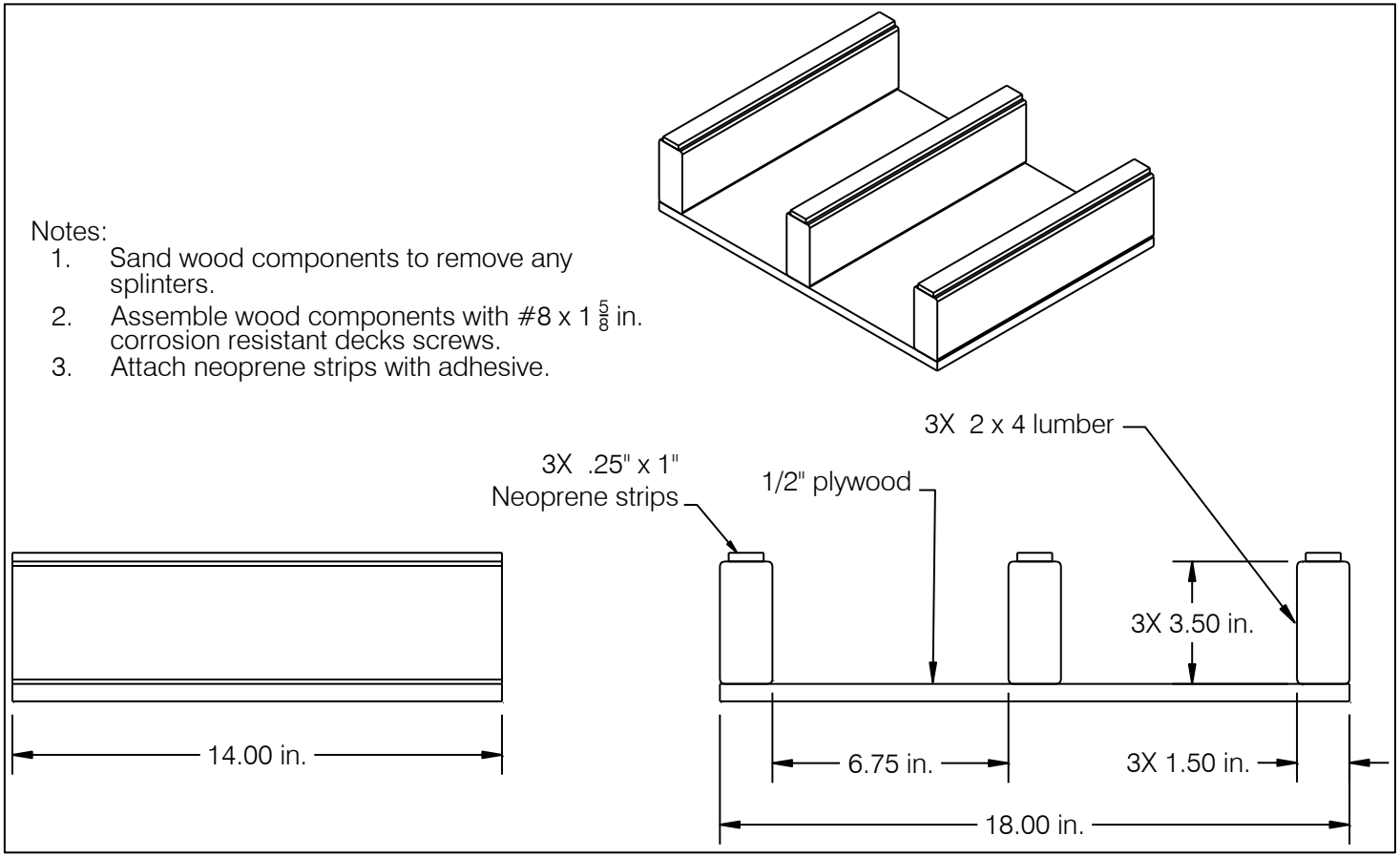

This document is proprietary to Onboard Systems Int'l. Disclosure or reproduction is not allowed. © 2025 Onboard Systems Int'l., all rights reserved.