Owner's Manual
Cargo Hook Swing Suspension

on the

Airbus Helicopters' AS350B3

STCs SR02719SE & SR02762SE

Onboard Systems International, LLC
13915 NW 3rd Court
Vancouver, WA 98685 United States of America
Cage Code: 1Y921

Toll Free Phone: (800) 275-0883
Phone: (360) 546-3072

Applicable Equipment Part Numbers

200-470-00, 200-470-01, 200-470-02

Please check our web site www.onboardsystems.com for the latest revision of this manual.

This document is proprietary to Onboard Systems Int'l. Disclosure or reproduction is not allowed. © 2026 Onboard Systems Int'l., all rights reserved.

Record of Revisions

Revision	Date	Page(s)	Reason for Revision
4	10/31/2022	5, 6, 48, 49	Added references to and explanation of STC number for an AS350B3 with RRFT.
5	07/07/2023	9, 10	Added note to Table 3.4.2 regarding spiral wrap in Removable Provisions Kit. In Table 3.4.3: corrected P/N 235-300-00 to 232-845-00 and added note regarding bolt P/N 511-091-00.
6	07/25/2023	21, 22	Removed "31L" from Instrument Lights in load weigh system schematic (Figure 4.2.2). In instructions for connecting C-40 backlight wires, added reference: "217L for post-mod 07-4280, or as applicable for the specific aircraft configuration".
7	11/20/2023	10, 12, 13, 54	Replaced C-40 Indicator P/N 210-293-00 with P/N 210-293-01 in Fixed Provisions Kit. Added Bolt P/N 511-091-00 to Fixed Provisions Kit. Replaced heat shrink P/N 450-112-00 with P/N 450-164-00 in the retrofit kits.
8	06/09/2025	5, 12, 50	Listed kit P/Ns 200-280-07 and 200-280-08 as kits that are eligible to upgrade with kit P/N 200-469-00.
9	09/22/2025	42	Added cleaning "Notice" to bleeding procedure.
10	07/29/2026	21	Updated load weigh system schematic to add post mod 0720207 interface.
11	11/17/2026	10	Listed Relay Bracket (290-783-00) in Table 3.4.3 for BOM for Fixed Provisions Kit P/N 200-468-00. (has always been included, was missing from list).

Register Your Products for Automatic Notifications

Onboard Systems offers a free notification service via fax or email for product alerts and documentation updates. By registering your Onboard Systems products at our website, we will be able to contact you if a service bulletin is issued, or if the documentation is updated.

You can choose to receive notices on an immediate, weekly, or monthly schedule via fax, email or both methods. There is no charge for this service. Please visit our website at https://www.onboardsystems.com/document/notify to get started.

This document is proprietary to Onboard Systems Int'l. Disclosure or reproduction is not allowed. © 2026 Onboard Systems Int'l., all rights reserved.

Table of Contents

1.0 Introduction 4
1.1 Scope 4
1.2 Safety labels 4
2.0 Referenced Documents 4
3.0 System Overview 5
3.1 Swing Removable Provisions Kit Overview 6
3.2 Fixed Provisions Kit 7
3.3 Cargo Hook with Surefire Description 7
3.4 Bill of Materials 9
3.5 Specifications 14
4.0 Installation 15
4.1 Internal Electrical Release and Load Weigh System Installation 15
4.1.1 Support Brackets Installation 16
4.2 Internal Load Weigh System Indicator and Wire Harness Installation 20
4.3 Cargo Release Harness Installation 24
4.4 Fixed Hydraulic Release System Installation 28
4.5 Shackle Assembly Installation 35
4.6 Cargo Swing Suspension Installation 36
4.7 Placards 41
4.8 Hydraulic System Fill and Bleed Procedure 42
4.9 Installation Check-out 47
4.11 Component Weights 49
4.12 Paper Work 49
5.0 Retrofit Kit Installation for P/N 200-280-03 50
5.1 Removable Provisions Retrofit 50
5.2 Fixed Provisions Retrofit 52
5.3 Connect Removable Provisions to Fixed Provisions 54
6.0 Retrofit Kit Installation for 200-280-01 and 200-280-04 55
6.1 Removable Provisions Retrofit for 200-280-01 and 200-280-04 55
6.2 Fixed Provisions Retrofit for 200-280-01 and 200-280-04 57
6.3 Connect Removable Provisions to Fixed Provisions 58
7.0 Operation Instructions 59
7.1 Cargo Hook Loading 59
8.0 Maintenance 60
8.1 Instructions for Returning Equipment to the Factory 60
9.0 Certification 61
9.1 FAA STC SR02719SE 61
9.2 FAA STC SR02762SE 63
9.3 EASA STC for SR02719SE 65
9.4 Transport Canada Approval 67
9.5 ANAC STC for SR02719SE 68
9.5.1 Placards for ANAC STC 70

This document is proprietary to Onboard Systems Int'l. Disclosure or reproduction is not allowed. © 2026 Onboard Systems Int'l., all rights reserved.

1.0 Introduction

1.1 Scope

This owner's manual contains instructions for installation of a Cargo Hook Swing Suspension (P/Ns 200-470-00, 200-470-01, and 200-470-02) on the Airbus Helicopters AS350B3 model.

1.2 Safety labels

The following definitions apply to safety labels used in this manual.



Indicates a hazardous situation which, if not avoided, will result in death or serious injury.



Indicates a hazardous situation which, if not avoided, could result in death or serious injury.



Indicates a hazardous situation which, if not avoided, could result in minor or moderate injury.



Draws the reader's attention to important or unusual information not directly related to safety.



Used to address practices not related to personal injury.

2.0 Referenced Documents

120-152-00	Owner's Manual, C-40 Indicator
121-071-00	RFM Supplement
122-015-00	Component Maintenance Manual
123-051-00	ICA Manual

This document is proprietary to Onboard Systems Int'l. Disclosure or reproduction is not allowed. © 2026 Onboard Systems Int'l., all rights reserved.

3.0 System Overview

The P/N 200-470-00, 200-470-01, and 200-470-02 Cargo Swing Suspension System kits provide the means for an AS350B3 rotorcraft to transport jettisonable external loads. These kits consist of a Fixed Provisions Kit (P/N 200-468-00) and a Swing Removable Provisions Kit, P/N 200-455-00, 200-455-01 or 200-455-02 (depending on the P/N of the cargo hook).

These kits provide a 14 CFR 27.952 crash resistant fuel system (CRFS) compliant configuration when installed per the instructions herein on an AS350B3 that is equipped with the CRFS. The following configurations under this STC are compliant to 27.952 when installed on an AS350B3 S/N 8915 and subsequent (these aircraft have the Airbus TC CRFS tank installed at the factory) or those retrofitted with an Airbus Helicopters CRFS that are compliant with 27.952 as specified in Airbus Safety Information Notice (SIN) No. 3281-S-28 Revision 2.

1. Installation of a complete P/N 200-470-00, 200-470-01 or 200-470-02 kit.
2. Installation of Swing Removable Provisions Kit P/N 200-455-00, 200-455-01 or 200-455-02 with Airbus Fixed Provisions per OP200070 on an AS350B3 (with CRFS).
3. Installation of Retrofit Kit P/N 200-469-00 to convert a P/N 200-280-03, 200-280-07, or 200-280-08 Cargo Swing Suspension System installed per STC SR01164SE. The Retrofit Kit is approved under this STC and installation instructions are included in Section 5.0.
4. Installation of Retrofit Kit P/N 200-479-00 to convert a P/N 200-280-01 or P/N 200-280-04 Cargo Swing Suspension System installed per STC SR01164SE. The Retrofit Kit is approved under this STC and installation instructions are included in Section 5.0.

NOTICE

For installation of any of the four (4) configurations listed above on an AS350B3 with CRFS, the applicable FAA STC is SR02719SE.

This document is proprietary to Onboard Systems Int'l. Disclosure or reproduction is not allowed. © 2026 Onboard Systems Int'l., all rights reserved.

The 200-470 series kits are physically compatible with AS350B3s retrofitted with an Airbus Helicopters' Rupture Resistant Fuel Tank (RRFT) as defined in Airbus SIN 3281-S-28 Rev. 2.

NOTICE

For AS350B3s not equipped with a RRFT or CRFS configuration, the cargo swing kits (P/N 200-280 series) approved under STC SR01164SE provide a compatible installation.

NOTICE

For installation of any of the kit configurations listed above on an AS350B3 with RRFT, the applicable FAA STC is SR02762SE.

3.1 Swing Removable Provisions Kit Overview

The Swing Removable Provisions Kits include the components external to the aircraft (ref. Figure 3.1.1 for overview) and are easily removable when a mission does not involve external loads. These kits include the swing frame assembly which supports the cargo hook and load cell, external electrical release and load cell harness, ground strap, and external hydraulic hose assembly. The swing frame assembly serves as part of the means to transfer the external load on the cargo hook to the hard points at the skid gear cross tubes. It is constructed of a welded tubular frame assembly and is attached to the hard points through four structural cable assemblies.

As part of compliance with regulation section 27.952 (fuel system crash resistance), a retraction system is included and uses bungee cord assemblies to pivot the swing frame assembly forward and out from under the center of the fuel tank when there is not a load on the cargo hook.

The Swing Removable Provisions Kit P/Ns 200-455-00, 200-455-01 and 200-455-02 are the same except for the P/N of the cargo hook. P/N 200-455-02 includes Cargo Hook P/N 528-028-02 which features Surefire Release (see section 3.3 for description).

The Swing Removable Provisions Kits can be installed with the Onboard Systems Fixed Provisions Kit P/N 200-468-00 or the Airbus Helicopters Fixed Provisions Kit identified as OP200070.

This document is proprietary to Onboard Systems Int'l. Disclosure or reproduction is not allowed. © 2026 Onboard Systems Int'l., all rights reserved.

Figure 3.1.1 Overview of Swing Removable Provisions

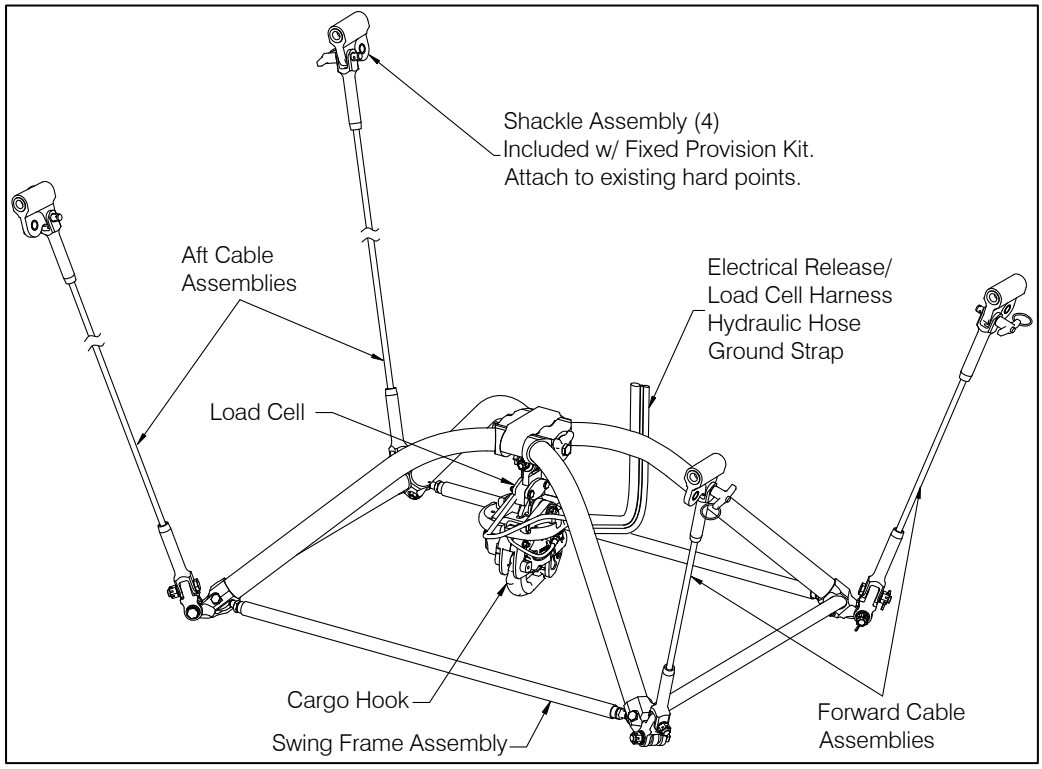

3.2 Fixed Provisions Kit

The Fixed Provisions Kit (P/N 200-468-00) includes the internal components of the cargo hook electrical release system, hydraulic release system, and the load weigh system.

The load weigh system includes the C-40 indicator and the internal wire harness to connect the load cell (above the Cargo Hook) to the C-40 indicator and to pick up aircraft power and ground. It also provides the capability to interface and function with the AS350B3 VEMD to increase the main rotor rpm to 400 when a load over 331 lbs (150 kg) is measured on the cargo hook by the load cell. See instructions in this manual to connect to the VEMD. Refer to the Owner's Manual 120-152-00 for additional information and detailed operating instructions including setup for the C-40 Indicator.

3.3 Cargo Hook with Surefire Description

The optional cargo hook (P/N 528-028-02) with Surefire includes a short time delay circuit built into the cargo hook's electrical release system. This feature is a safety enhancement to protect against inadvertent load release due to accidental contact with the release switch or mistaken actuation of the cargo hook switch when another is intended. The time delay feature requires that the release switch be depressed and held for more than a 1/2 second to open the cargo hook. Surefire makes the electrical release a more deliberate pilot command. If the cargo hook must be released immediately, use the mechanical backup release.

This document is proprietary to Onboard Systems Int'l. Disclosure or reproduction is not allowed. © 2026 Onboard Systems Int'l., all rights reserved.

In addition to its P/N, a cargo hook with Surefire can be identified by a gold color solenoid housing (see Figure 3.3.1). Also, a placard on the underside of the solenoid housing indicates that the electrical release is delayed by ½ second.

NOTICE

The 528-028-02 cargo hook includes an electronic delay of approximately ½ second. It is necessary to press and hold the cargo hook release button.

⚠ CAUTION

If a Surefire-equipped cargo hook must be released immediately without any delay (such as the case of engine failure or snagged load), use the mechanical backup release.

In addition to the delay feature the circuit includes on-off cycling to limit the duty-cycle on the cargo hook solenoid. If the release switch is held down, the solenoid will cycle on and off repeatedly in a "machine gun" fashion.

Figure 3.3.1 Surefire Configuration Identification

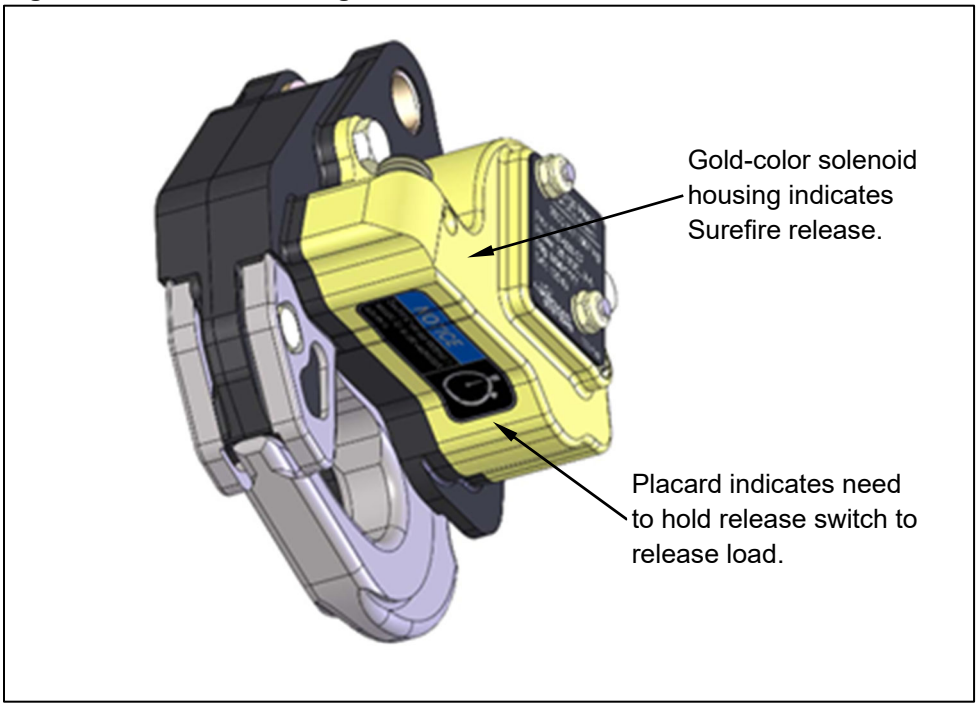

This document is proprietary to Onboard Systems Int'l. Disclosure or reproduction is not allowed. © 2026 Onboard Systems Int'l., all rights reserved.

3.4 Bill of Materials

The Cargo Swing Kits P/Ns 200-470-00, 200-470-01 and 200-470-02 differ in the P/N of the Swing Removable Provision Kit used. These are listed in the table below.

Table 3.4.1 Cargo Swing Kit Bill of Materials

Part No.	Description	Qty 200-470-00	Qty 200-470-01	Qty 200-470-02
200-455-00	Swing Removable Provisions Kit	1	-	-
200-455-01	Swing Removable Provisions Kit	-	1	-
200-455-02	Swing Removable Provisions Kit	-	-	1
200-468-00	Fixed Provisions Kit	1	1	1

The following items are included with the Removable Provisions Kit P/Ns 200-455-00, 200-455-01 and 200-455-02. If shortages are found contact the company from whom the system was purchased.

Table 3.4.2 Removable Provisions Kit Bill of Materials

Part No.	Description	Qty 200-455-00	Qty 200-455-01	Qty 200-455-02
232-844-00	Swing Hook Frame Assembly	1	-	-
232-844-01	Swing Hook Frame Assembly	-	1	-
232-844-02	Swing Hook Frame Assembly	-	-	1
215-166-00	Max Hook Load 3086 Decal	1	1	1
215-343-00	Cockpit Decal	-	-	1
232-140-01	Forward Attach Cable Assembly	2	2	2
232-141-01	Aft Attach Cable Assembly	2	2	2
490-021-00	Bungee Cord Assembly	2	2	2
590-046-00	Spiral Wrap	**	**	**
120-156-00	Owner's Manual	*	*	*
121-071-00	RFMS	*	*	*
123-051-00	ICA	*	*	*
122-015-00	CMM, Cargo Hook	*	*	*

*Documentation must be downloaded from www.onboardsystems.com

**Spiral Wrap P/N 590-046-00 may or may not be included in the Removable Provisions Kits, as of June 2023 it is being phased out and replaced by a protective sleeving that is a part of the Swing Frame Assembly.

This document is proprietary to Onboard Systems Int'l. Disclosure or reproduction is not allowed. © 2026 Onboard Systems Int'l., all rights reserved.

The following items are included with the Fixed Provisions Kit P/N 200-468-00. If shortages are found contact the company from whom the system was purchased.

Table 3.4.3 Fixed Provisions Kit P/N 200-468-00 Bill of Materials

Part No.	Description	Qty
210-293-01***	C-40 Indicator**	1
215-165-00	Multiple Decal Sheet	1
232-137-01	Shackle Assembly	4
232-794-00	Master Cylinder Assembly with Plumbing	1
235-259-00	C-40 Mount	1
235-299-00	Bungee Bracket	2
232-845-00	Connector Bracket Assembly	1
270-296-00	Load Weigh Internal Harness	1
270-297-00	Cargo Hook Release Harness	1
290-783-00	Relay Bracket	1
410-457-00	Cable Tie Mount	10
410-460-00	Bracket, Clamp	1
445-005-00	Relay	1
500-014-00	Spacer	1
500-062-00	Spacer	1
505-014-00	Grommet	1
510-042-00	Washer	4
510-095-00	Washer	4
510-102-00	Nut	5
510-277-00	Screw	2
510-278-00	Washer	2
510-279-00	Nut	3
510-475-00	Screw	3
510-700-00	Screw	4
510-712-00	Bolt	1
510-923-00	Screw	1
510-959-00	Screw	1
511-046-00	Screw	2
511-091-00	Bolt	1
511-235-00	Perimeter Nut Plate	1
511-236-00	Screw	4
511-238-00	Rivet	1
512-005-00	Loop Clamp	1
512-011-00	Cable Tie	10
212-014-02	Bleed Kit	1
120-152-00	Owner's Manual, C-40 Indicator	*

*Documentation must be downloaded from www.onboardsystems.com

**C-39 Indicator (P/N 210-095-00) is optional to the C-40 model. Installation of the C-39 Indicator requires Bracket P/N 290-772-00 and four screws P/N 510-457-00 (these parts replace C-40 Mount P/N 235-259-00, screw P/Ns 510-923-00 and 511-046-00 and spacer P/N 500-014-00).

***C-40 Indicator P/N 210-293-01 replaces P/N 210-293-00 in new productions kits as of November 2023, these are interchangeable except for software compatibility. Refer to C-40 Owner's Manual 120-152-00 for software versions.

This document is proprietary to Onboard Systems Int'l. Disclosure or reproduction is not allowed. © 2026 Onboard Systems Int'l., all rights reserved.

To complete the cargo hook installation the following parts are necessary to obtain (these parts are frequently found to be on the aircraft from the factory or are standard Airbus Helicopters parts). Parts listed with Onboard Systems part numbers may have availability from Onboard Systems. In addition, the Airbus "CARGO REL" button on the cyclic and associated wiring to 20ALP must be installed.

NOTICE

These items may or may not be installed with a standard aircraft, therefore verification is recommended before purchasing them.

Table 3.4.4 Airbus Parts Required

Airbus P/N	Onboard Systems P/N	Description	Qty
22201BE120074L	610-004-00*	Screw (ref Figure 4.5.1)	4
23111AG120LE	610-025-00*	Washer (ref Figure 4.5.1)	8
ASN52320BH120N	610-026-00*	Nut (ref Figure 4.5.1)	4
350A41-1097-20	610-015-00*	Half Clamp, Rear	2
350A-41-1099-20	610-035-00*	Half Clamp Pad	2
DHS751-160.62	N/A	Grommet (ref Figure 4.4.3)	1
SL211M5-1	N/A	Nut (in door post for C-40 Mount)	3
350A86-0020-33 or 350A86-1101-23	N/A	Bracket (ref. Figure 4.4.4)	1
Ref. Airbus IPC	N/A	Load Weigh Circuit Breaker, 2.5A, located at 31ALP32	1
Ref. Airbus IPC	N/A	Cargo Release Circuit Breaker, 10A, located at 44ALP	1

This document is proprietary to Onboard Systems Int'l. Disclosure or reproduction is not allowed. © 2026 Onboard Systems Int'l., all rights reserved.

A CRFS Retrofit Kit (P/N 200-469-00) is available to convert an existing cargo swing suspension kit P/N 200-280-03, 200-280-07, or 200-280-08 installed per STC SR01164SE to a CRFS compatible installation. Table 3.4.5 includes the bill of materials for this kit.

Table 3.4.5 Retrofit Kit 200-469-00 Bill of Materials

Part No.	Description	Qty
232-796-00	Master Cylinder Plumbing	1
232-829-00	Slave Cylinder Assy W/ Plumbing	1
232-845-00	Connector Bracket, Assembly	1
235-170-00	Bracket	1
235-299-00	Bungee Bracket, Fwd	2
270-285-00	Ground Strap, Removable	1
270-295-00	CRFS Retrofit Harness	1
410-199-00	Shield Termination	1
410-452-00	Backshell	1
410-455-00	Connector	1
410-456-00	Socket Contact	8
450-164-00	Shrink Sleeve 3/8 Black	2"
450-121-00	Shrink Boot, Straight	1
490-021-00	Bungee Cord Assembly	2
510-042-00	Washer	4
510-102-00	Nut	4
510-178-00	Cotter Pin	2
510-279-00	Nut	1
510-676-00	Bolt	1
510-700-00	Screw	4
510-959-00	Screw	1
511-235-00	Perimeter Mounting Flange	1
511-236-00	Screw	4
512-011-00	Cable Tie - Black	10

This document is proprietary to Onboard Systems Int'l. Disclosure or reproduction is not allowed. © 2026 Onboard Systems Int'l., all rights reserved.

A CRFS Retrofit Kit (P/N 200-479-00) is also available to convert an existing cargo swing suspension kit P/N 200-280-01 or P/N 200-280-04 installed on an AS350B3 per STC SR01164SE to a CRFS compatible installation with a cargo hook w/ hydraulic release. Table 3.4.6 lists the bill of materials for this kit. The P/N 200-280-01 and 200-280-04 kits include cargo hook P/Ns 528-023-01 and 528-029 respectively, which use a mechanical release cable for backup release.

Table 3.4.6 Retrofit Kit 200-479-00 Bill of Materials

Part No.	Description	Qty
232-794-00	Master Cylinder Assembly w/ Plumbing	1
232-829-00	Slave Cylinder Assy W/ Plumbing	1
232-845-00	Connector Bracket, Assembly	1
235-170-00	Bracket	1
235-299-00	Bungee Bracket, Fwd	2
270-285-00	Ground Strap, Removable	1
270-295-00	CRFS Retrofit Harness	1
290-839-02	Bumper	1
410-199-00	Shield Termination	1
410-452-00	Backshell	1
410-455-00	Connector	1
410-456-00	Socket Contact	8
410-457-00	Cable Tie Mount	10
410-460-00	Bracket	1
450-164-00	Shrink Sleeve 3/8 Black	2"
450-121-00	Shrink Boot, Straight	1
490-021-00	Bungee Cord Assembly	2
500-062-00	Spacer	1
505-014-00	Grommet	1
510-042-00	Washer	4
510-095-00	Washer	1
510-102-00	Nut	4
510-178-00	Cotter Pin	2
510-279-00	Nut	1
510-531-00	Screw	2
510-676-00	Bolt	1
510-700-00	Screw	4
510-712-00	Bolt	1
510-718-00	Nut	1
510-959-00	Screw	1
511-235-00	Perimeter Mounting Flange	1
511-236-00	Screw	4
511-238-00	Rivet	1
512-011-00	Cable Tie - Black	10
528-028-04	Cargo Hook	1
590-046-00	Spiral Wrap	51"

This document is proprietary to Onboard Systems Int'l. Disclosure or reproduction is not allowed. © 2026 Onboard Systems Int'l., all rights reserved.

3.5 Specifications

Table 3.5.1 Cargo Swing Suspension (P/N 200-455-00, -01, -02) Specifications

Design load rating*	3,086 lb. (1,400 kg)
Design ultimate strength	11,574 lb. (5,250 kg)
Unit weight	30.0 lbs (13.6 kg)

Table 3.5.2 Cargo Hook Specifications

Design load rating*	3,500 lb. (1,587 kg)
Design ultimate strength	13,125 lb. (5,952 kg)
Electrical release capacity	8,750 lb. (3,969 kg)
Mechanical release capacity	8,750 lb. (3,969 kg)
Force required for mechanical release at 3,500 lbs.	12 lbs. max @ master cylinder.
Electrical requirements	9 amps @ 28 VDC
Minimum release load	0 pounds
Unit weight	3.0 lbs (1.35 kg)
Mating primary electrical release connector	PC05A8-2S

⚠ CAUTION

**Load ratings given are specific to the equipment described only. Loading limits for the helicopter still apply. Consult the flight manual issued by the TC holder and the flight manual supplement provided with the cargo hook kit for limits.*

This document is proprietary to Onboard Systems Int'l. Disclosure or reproduction is not allowed. © 2026 Onboard Systems Int'l., all rights reserved.

4.0 Installation

These procedures are provided for the benefit of experienced aircraft maintenance facilities capable of carrying out the procedures. They must not be attempted by those lacking the necessary expertise. For the termination of the internal load weigh harness wires an M22520/2-01 and M22520/1-01 crimper and appropriate dies are required.

Installation of the Fixed Provisions Kit P/N 200-468-00 is addressed in Sections 4.1 through 4.5. If the compatible Airbus Fixed Provisions Kit is installed, skip to Section 4.6. If converting an existing P/N 200-280-03 installation of STC SR01164SE, refer to Section 5.0.

4.1 Internal Electrical Release and Load Weigh System Installation

This section provides instructions for installing the internal electrical components including support brackets and the wire harnesses for the cargo hook's electrical release system and the load weigh system. The routing of these harnesses duplicates the routing of the Airbus Helicopters type certificated cargo swing suspension system wiring. Figure 4.1.1 provides an overview of the wire routing.

For aircraft with Airbus MOD 07-4716 incorporated, the load weigh system can be connected to the VEMD to function as part of the system to increase the main rotor RPM when a load of 150 kg or more is carried. See instructions in this section.

Route along existing harnesses while observing the following precautions.

- Pick up existing wire runs by opening existing cable clamps. Nylon ties alone may not be used for primary support.
- The distance between supports should not exceed 21 inches.
- Bend radius of wire or harness must not be less than 10 times the wire or harness diameter.
- Inspect and verify that the wire harness may not be manually deflected into a structure with a bend radius of less than 0.13".

Figure 4.1.1 Bracket Locations and Wire Routing Overview

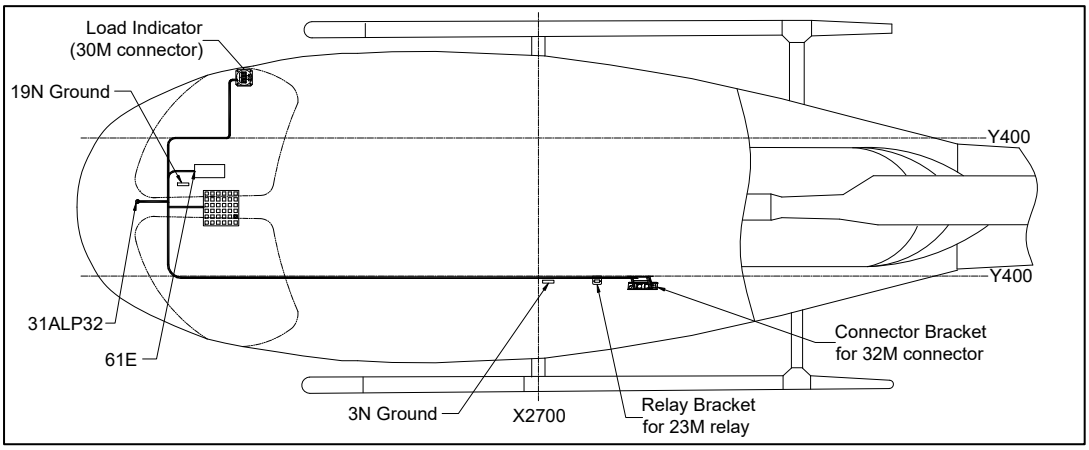

This document is proprietary to Onboard Systems Int'l. Disclosure or reproduction is not allowed. © 2026 Onboard Systems Int'l., all rights reserved.

4.1.1 Support Brackets Installation

To support the relay, electrical connectors and the load indicator, three brackets are installed. The Relay Bracket (P/N 290-783-00) and Connector Bracket (P/N 232-845-00) are installed on the outboard side of the LH keel beam (at Y400) and the C-40 Mount (P/N 235-259-00) or the optional C-39 Indicator Mount Bracket (P/N 290-772-00) is installed at the RH forward door pillar.

Install the supplied Relay Bracket per the following.

1. Create two holes in the LH beam at Y400 to match the Relay Bracket hole pattern (as illustrated in Figure 4.1.2). These holes may be existing as this is the same location as the original Airbus type certificate cargo hook relay.

Figure 4.1.2 Relay Bracket Installation

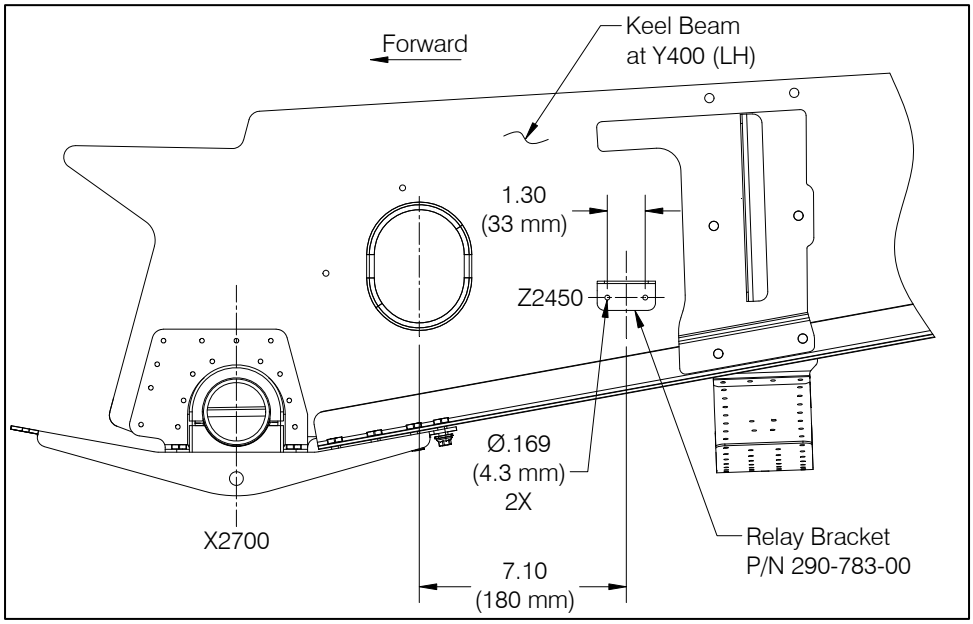

2. Secure the Relay Bracket on the outboard side of the keel beam with two screws (P/N 510-277-00), two washers (P/N 510-278-00), and two nuts (P/N 510-279-00).

This document is proprietary to Onboard Systems Int'l. Disclosure or reproduction is not allowed. © 2026 Onboard Systems Int'l., all rights reserved.

Install the Connector Bracket (P/N 232-845-00) on the outboard side of the LH keel beam, aft of the Relay Bracket, per the following (ref Figure 4.1.3). This Connector Bracket is provided with the ground strap BNC connector pre-installed and will also support the 32M connector and the hydraulic hose connector.

3. Position the Connector Bracket parallel to the flange of the keel beam and .79 in (20 mm) above and position the lower left hole at 1.30 in. (33 mm) aft of the Doubler for the forward fuel tank support.

4. If necessary*, create four holes in the keel beam as specified (to match the mounting hole pattern of the connector bracket). Due to spring-back the sheet metal connector bracket may require slight flexing to align the holes with this pattern.

   *These holes may exist as this is the same location as the Airbus type certificate connector bracket.

5. For electrical bonding purposes - remove finish (primer, etc.) from the area of the keel beam that will contact one of the flanges of the connector bracket when installed.

Figure 4.1.3 Connector Bracket Position

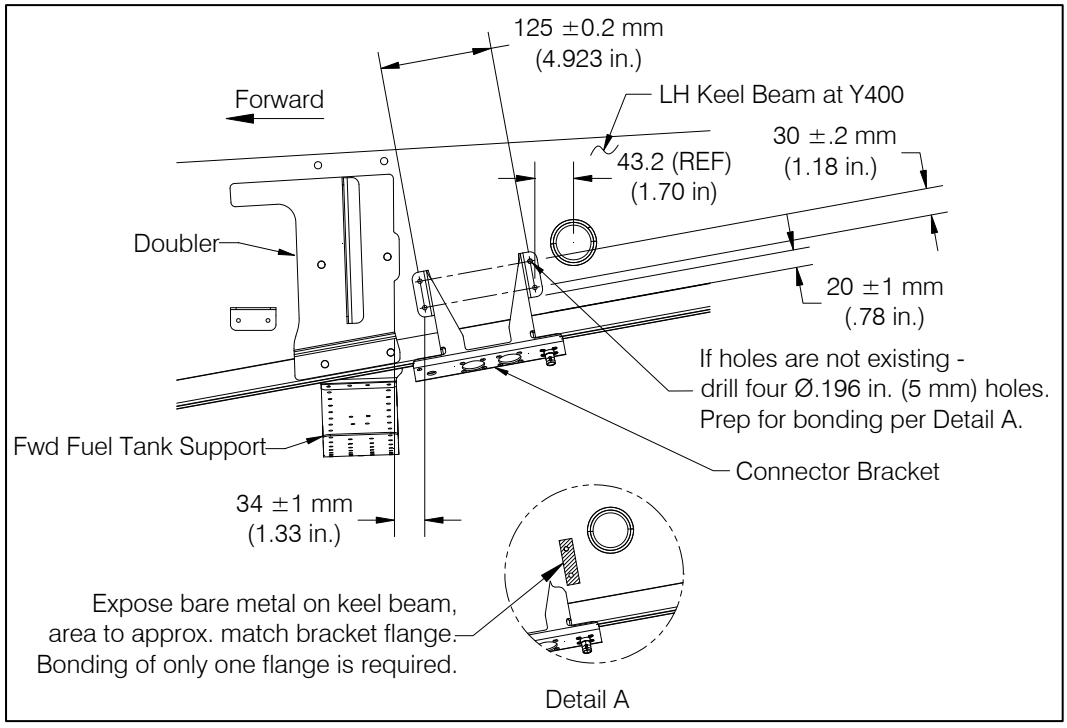

This document is proprietary to Onboard Systems Int'l. Disclosure or reproduction is not allowed. © 2026 Onboard Systems Int'l., all rights reserved.

6. Secure the Connector Bracket on the outboard side of the keel beam with four screws (P/N 511-236-00), four washers (P/N 510-042-00) and four nuts (P/N 510-102-00). Insert the screws from the **inboard** side of the keel beam.

NOTICE

The screw heads must be on the inboard side of the keel beam for 27.952 compliance.

The Connector Bracket location requires a new hole in the lower fairing to pass through and access the removable connectors from below when installed.

7. Modify the fairing per the Airbus maintenance manual using the figure below. This is an estimated location and should be verified at each aircraft.

Figure 4.1.4 Lower Fairing Modification

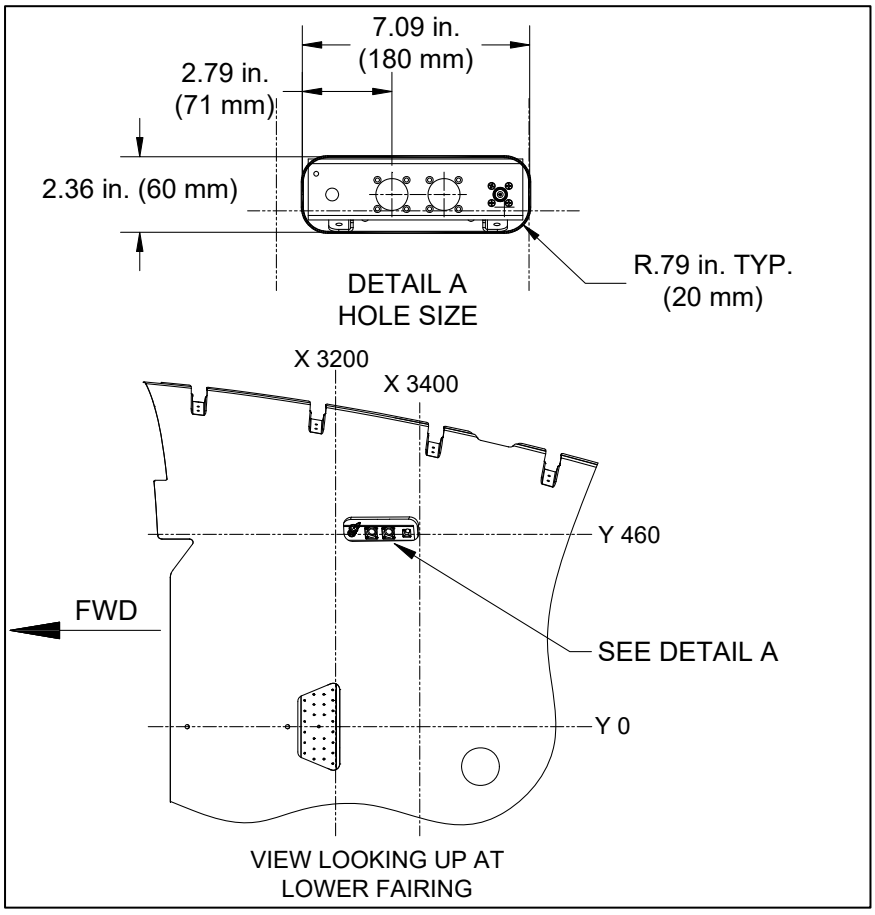

This document is proprietary to Onboard Systems Int'l. Disclosure or reproduction is not allowed. © 2026 Onboard Systems Int'l., all rights reserved.

The bracket for the Indicator is mounted on the forward right-hand (RH) door post, in the same location and using the same mounting holes as the Airbus TC installed Indicator bracket.

8. Position the C-40 Mount (P/N 235-259-00) or the Indicator Mount Bracket (P/N 290-772-00) for the optional C-39 Indicator on the door post (ref. Figure 4.1.5) and secure to the existing holes* with the three screws (P/N 510-475-00) and three washers (P/N 510-095-00) provided.

*if holes are not present create them using the indicator bracket's hole pattern (which duplicates the Airbus mount) and install nuts in the door post per Airbus Service Bulletin No. 25.00.62 section 2.B.3.2.

Figure 4.1.5 Bracket Installation (C-40 Mount shown)

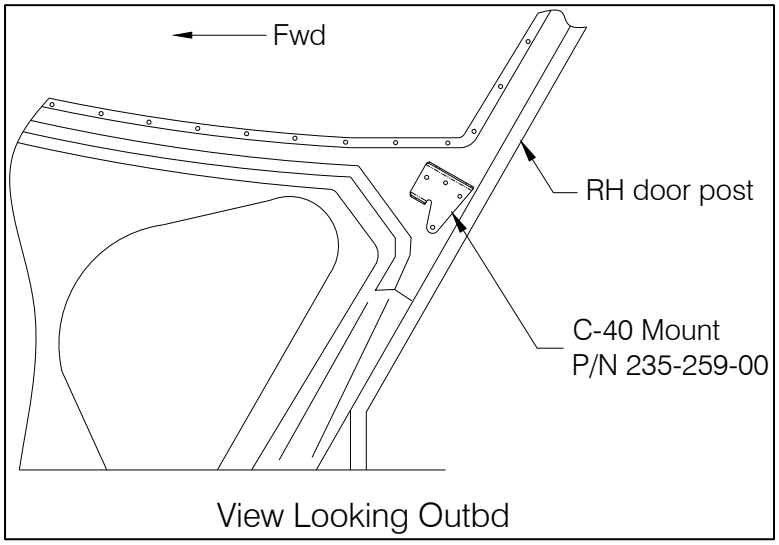

This document is proprietary to Onboard Systems Int'l. Disclosure or reproduction is not allowed. © 2026 Onboard Systems Int'l., all rights reserved.

4.2 Internal Load Weigh System Indicator and Wire Harness Installation

1. Position the C-40 Indicator within the C-40 Mount and secure with hardware shown in Figure 4.2.1. Secure the P/N 511-046-00 screws with lock wire.

Figure 4.2.1 C-40 Indicator Installation

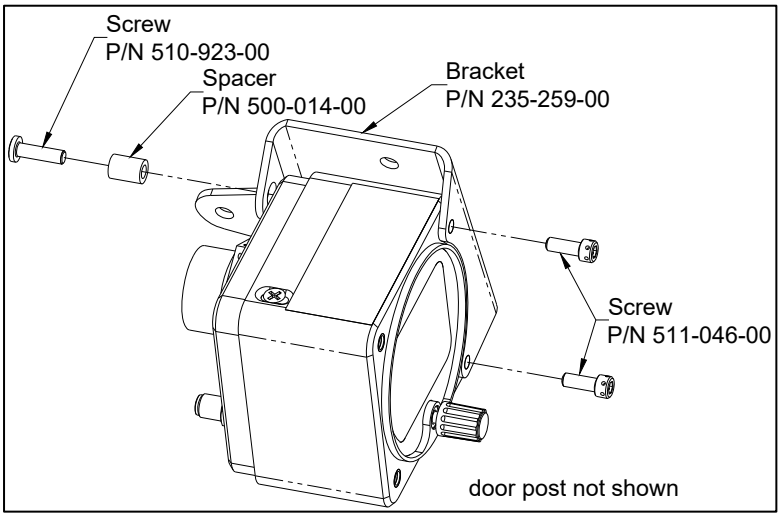

If installing the C-39 model indicator, position the C-39 in its mount bracket, and secure with four screws (P/N 510-457-00).

2. Connect the 30M connector of the load weigh internal harness P/N 270-296-00 to the Indicator's connector and route the harness wires per the following steps, referring to the schematic of Figure 4.2.2 for termination points. Trim unterminated wires to length as necessary and make connections to the aircraft interface with contacts provided with harness or as specified by Airbus manual. Other wires are provided with terminations pre-installed at the factory.

NOTICE

The C-39 Indicator is not compatible with the VEMD. If installing the C-39 Indicator, cap and stow the ANALOG OUT wire.

This document is proprietary to Onboard Systems Int'l. Disclosure or reproduction is not allowed. © 2026 Onboard Systems Int'l., all rights reserved.

The load weigh system schematic below includes the AS350B3's post-mod 074280/post-mod 074614 configuration with the 155M relay and loopback through 32M connector pins L and M. Indicator power is provided from 155M pin 25 when the "Sling" system is activated and the external load cell harness is connected (connecting pins L and M). Also shown is post-mod 0720207 which replaces 155M with 261DEL.

For aircraft configurations other than that shown in Figure 4.2.2, modifications may be made to the load weigh system harness as follows. For aircraft configurations without provisions for or without the loopback wire between 32M pins L and M, splice the Sling Power wire and the Sling Loopback wires together instead of installing in the 32M connector receptacle. For aircraft configurations without a 155M or 156M relay (aircraft without a "Sling" button on the 131ALP or 30ALP console), splice together the Sling Power and Indicator Power wires. For this configuration an SPST or SPDT switch with a rating of at least 1 amp at 28VDC (such as Onboard Systems P/N 400-048-00) may be installed between these wires if on/off control of the indicator is desired.

In the schematic below, Airbus wire numbers are shown in parentheses for reference. If the Airbus wires are present between the existing aircraft components (shown in dashed lines), then remove the corresponding wire from the P/N 270-296-00 harness bundle.

Figure 4.2.2 Load Weigh System Schematic

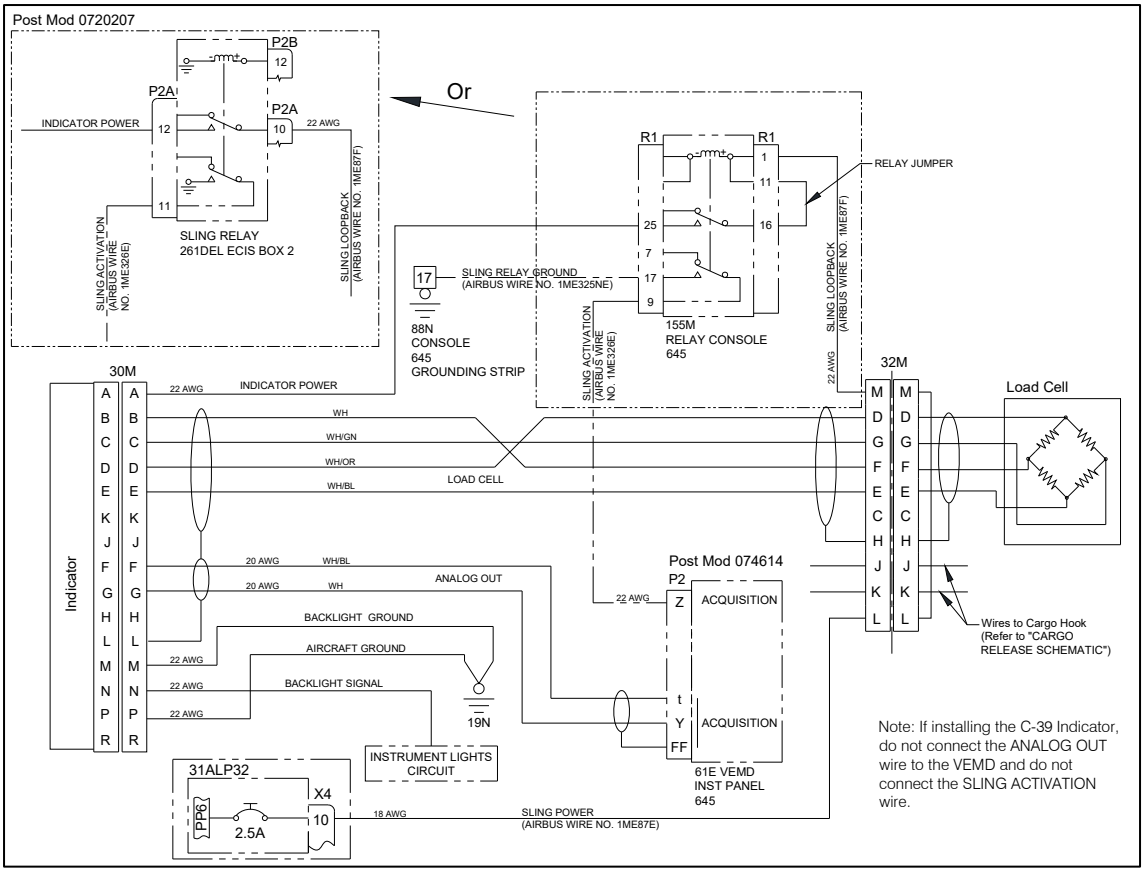

This document is proprietary to Onboard Systems Int'l. Disclosure or reproduction is not allowed. © 2026 Onboard Systems Int'l., all rights reserved.

The C-40 Indicator and the supplied Load Weigh Internal Harness P/N 270-296-00 provide the capability to interface and function with the AS350B3 VEMD to increase the main rotor RPM to 400 when a load over 331 lbs (150 kg) is measured on the cargo hook. See instructions following to connect to the VEMD, if this is not to be connected or the C-39 model is being installed, cap and stow the ANALOG OUT wire and skip to step 4.

Connection of the ANALOG OUT wires to the VEMD connector duplicates the original type certificated load indicator. Refer to Airbus SB AS350-25.01.87 for more information on the pre and post mods as necessary to verify the VEMD configuration.

NOTICE

Verify the VEMD configuration before connecting the ANALOG OUT wires.

3. Route the ANALOG OUT 2-conductor wire from 30M connector to the back of the VEMD (61E) for connection to its P2 connector. The ANALOG OUT wires are prepped to insert into P2. Table 4.2.1 provides the pin-out information and this information is also represented in the schematic for the load weigh system.

Table 4.2.1 ANALOG OUT Wire to VEMD (61E) Connection

ANALOG OUT Wire	Pin of VEMD Connector P2
WH/BL	t
WH	Y
WH/BLK (shield)	FF

4. Route wire BACKLIGHT SIGNAL (for the indicator backlight) to an available pin in the instrument lighting circuit (31L for pre-mod 07-4280, 217L for post-mod 07-4280, or as applicable for the specific aircraft configuration).

NOTICE

The C-40 Indicator does function normally without the Backlight Control Voltage wired but will just not dim with other instruments. Full brightness of the Indicator is overridden by the aircraft dimming control voltage (if connected).

This document is proprietary to Onboard Systems Int'l. Disclosure or reproduction is not allowed. © 2026 Onboard Systems Int'l., all rights reserved.

5. Route wires BACKLIGHT GROUND and AIRCRAFT GROUND from 30M connector to aircraft ground point 19N, trim to length as needed, crimp on contact P/N 410-465-00 and insert.

6. Route INDICATOR POWER wire from the 30M connector to pin 25 of relay 155M, trim to length as needed, and crimp on contact P/N 410-228-00 and insert.

7. Route the 6-conductor LOAD CELL wire with existing wire harnesses to the left side of the aircraft and then aft along the left side of the keel beam at -Y400 to the Connector Bracket (P/N 232-845-00) where the wires are to be terminated into the 32M connector provided pre-assembled onto the Cargo Hook Internal Harness (P/N 270-297-00) per the following section.

8. Route SLING LOOPBACK wire from the 32M connector location (ref. Figure 4.3.2) where it is to be terminated in the following section with the LOAD CELL and SLING POWER wires to 155M pin 1, trim to length as needed, and terminate with contact P/N 410-228-00 at 155M.

9. Route SLING POWER wire from the 32M connector location to 31ALP32 circuit breaker panel, trim to length as needed and terminate to circuit breaker (refer to schematic)

10. The following wires to connect between existing aircraft components are bundled with the harness and are connected as follows. Refer also to the schematic. Trim to length as necessary.

    - SLING ACTIVATION between 61E pin Z and 155M pin 9 – this wire is provided terminated with a socket contact for 61E, use socket contact P/N 410-228-00 at 155M. Do not connect this wire if the optional C-39 Indicator is being installed.

    - RELAY JUMPER between relay 155M pins 11 and 16 - use contact P/N 410-228-00 at each end.

    - SLING RELAY GROUND between 88N and 155M pin 17 - use contact P/N 410-465-00 at 88N and P/N 410-228-00 at 155M.

11. Secure the load weigh harness wires forward of the load weigh indicator along the canopy with Supports (Airbus P/N 355A61-5099-20 or similar) as defined in Airbus Service Bulletin 25.00.62 Figure 4.

This document is proprietary to Onboard Systems Int'l. Disclosure or reproduction is not allowed. © 2026 Onboard Systems Int'l., all rights reserved.

4.3 Cargo Release Harness Installation

The Cargo Release Harness (P/N 270-297-00) is provided with a backshell, heat shrink tubing and shrink boot pre-assembled over the ME5E wire but left loose so the wires from the load weigh harness can be terminated after routing them through the airframe. A heat gun is required to shrink the heat shrink tubing and shrink boot in place after assembly.

1. Slide the load weigh harness wires through the heat shrink tubing, shrink boot, and backshell and up to the connector.

Figure 4.3.1 Assembly of Load Weigh Harness to 32M Connector

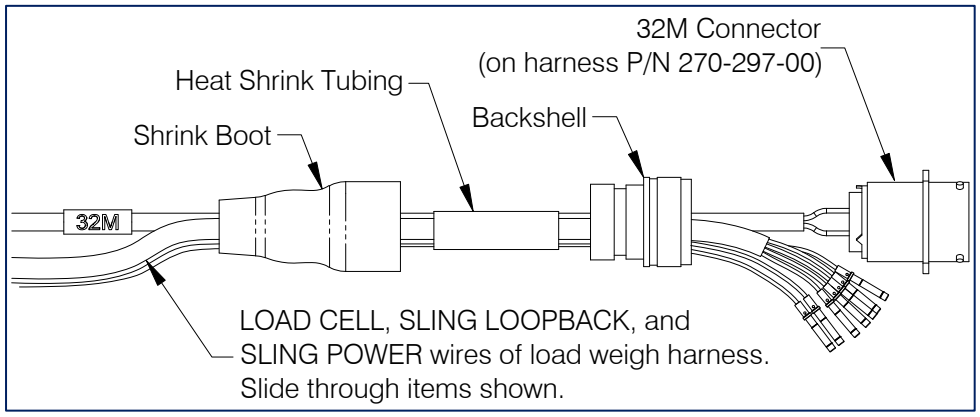

2. Insert the wires into the 32M connector of harness P/N 270-297-00 per the table below (the wires of the load weigh harness are provided terminated with contacts crimped on).

Table 4.3.1 32M Connector Pin-out

Wire and Color	Termination at 32M
Load Cell – WH/OR	D
Load Cell – WH/BLU	E
Load Cell – WH	F
Load Cell – WH/GRN	G
Shield – WH/BLK	H
Sling Power – WH	L
Sling Loopback – WH	M

This document is proprietary to Onboard Systems Int'l. Disclosure or reproduction is not allowed. © 2026 Onboard Systems Int'l., all rights reserved.

3. Slide the backshell up to the connector and thread it on, tightening it securely.
4. Slide the heat shrink tubing up to the backshell and shrink in place with heat gun.
5. Slide the shrink boot over the backshell and shrink in place such that the lip of the boot seats within the groove on the backshell.
6. Install the 32M connector in the aft of the middle two holes (shown in Figure 4.3.2) with the supplied four screws (P/N 510-700-00) and perimeter nut plate (P/N 511-235-00).

Figure 4.3.2 32M Connector Location

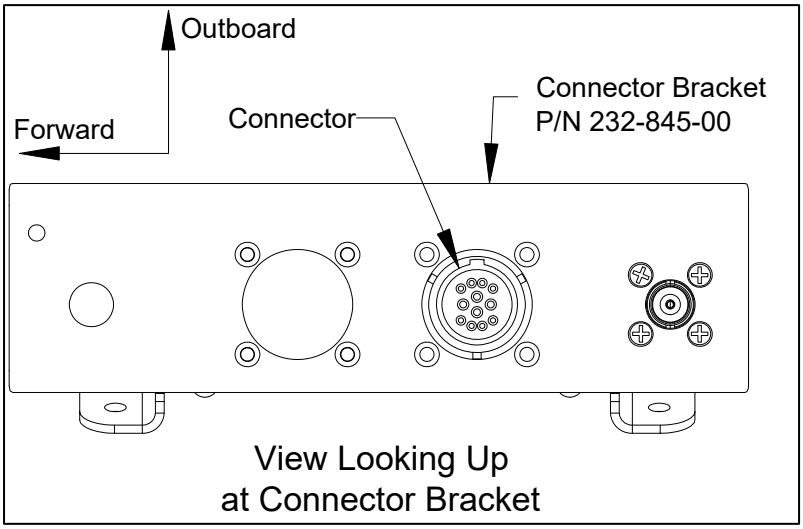

This document is proprietary to Onboard Systems Int'l. Disclosure or reproduction is not allowed. © 2026 Onboard Systems Int'l., all rights reserved.

The schematic for the electrical release system is shown in Figure 4.3.3 along with the aircraft's interface points. Airbus Helicopters modifications 07-4280 and 07-3450 are reflected below. Refer to the applicable Airbus Helicopters Wiring Diagrams Manual for additional information or for other aircraft side wiring configurations.

Figure 4.3.3 Cargo Release Schematic

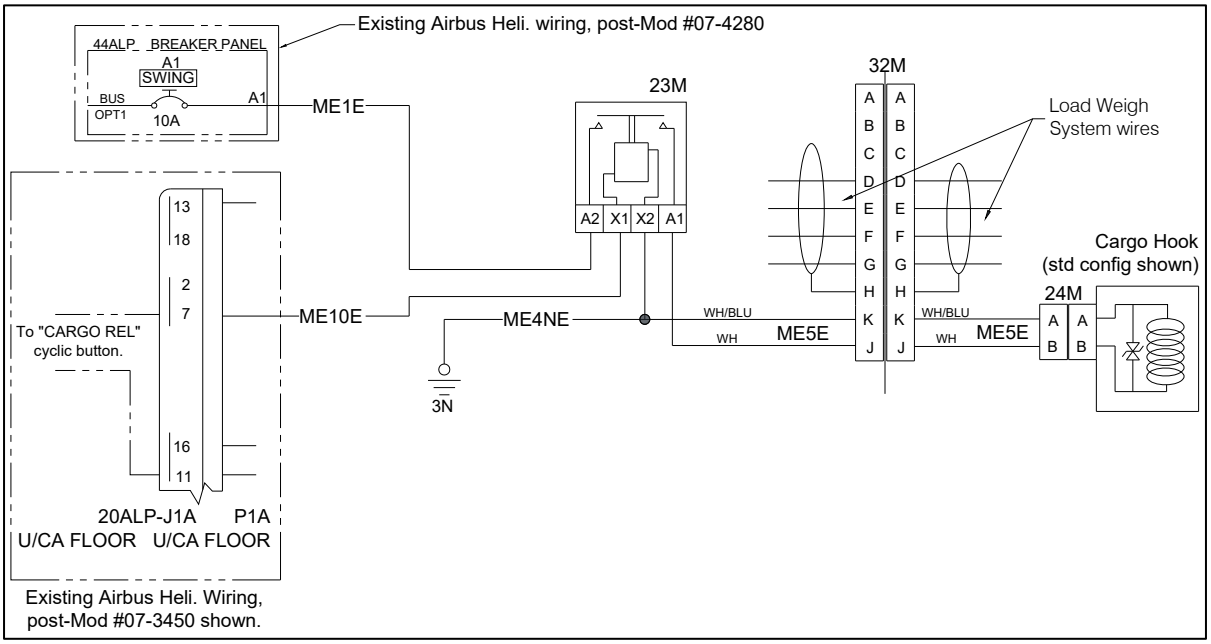

Install the relay socket and route the wires of the cargo release harness (P/N 270-297-00) per the following.

7. Place the relay socket (part of the P/N 270-297-00 harness) into the relay bracket from below and secure with hardware provided with relay (as illustrated below).

8. Plug the relay (445-005-00) into the relay socket and secure it with the remaining hardware provided with the relay.

This document is proprietary to Onboard Systems Int'l. Disclosure or reproduction is not allowed. © 2026 Onboard Systems Int'l., all rights reserved.

Figure 4.3.4 Relay Installation

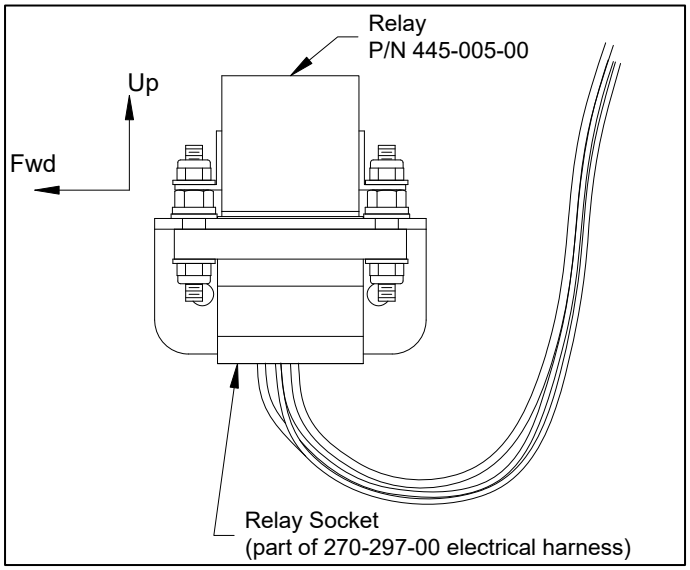

9. Route the ME4NE, ME10E, ME1E wires, and the ME5E wire with 32M connector to the right of the relay and up to the existing bundle.

10. Secure ME5E along the bundle aft to the connector bracket with minimum two each of the provided Cable Tie Mount (P/N 410-457-00) and Cable Ties (P/N 512-011-00).

For the remaining ME4NE, ME10E, and ME1E wires of the harness, route them along existing bundles to termination points per the following, cut to length as needed and use contacts provided with harness or as specified by Airbus manuals to make terminations.

11. Route wire ME4NE to the 3N ground location (forward of the relay bracket) and terminate.

12. Route wire ME10E forward to the aircraft interface for the CARGO REL cyclic button (ref. schematic of Figure 4.3.3 for termination point).

13. Route wire ME1E forward to the circuit breaker panel (ref. Figure 4.3.3).

Complete the installation by applying the connector labels on the Decal Sheet P/N 215-165-00 per the following.

14. Apply the 32M label to the bottom side of the connector bracket and adjacent to the 32M connector.

15. Apply the 23M label to the relay bracket.

16. Apply the 30M label adjacent to the load indicator connector.

17. Apply the 24M connector to the cargo hook, adjacent to the connector.

This document is proprietary to Onboard Systems Int'l. Disclosure or reproduction is not allowed. © 2026 Onboard Systems Int'l., all rights reserved.

4.4 Fixed Hydraulic Release System Installation

The hydraulic release system installation consists of a fixed section and a removable section. The fixed section consists of the release lever/master cylinder assembly mounted to the collective and hose which is routed underneath the cabin floor and back to the connector bracket mounted to the left keel beam at Y400. Figure 4.4.1 is an overview of the hose routing and the figures following detail the various points of securing it.

Figure 4.4.1 Fixed Hydraulic Hose Routing

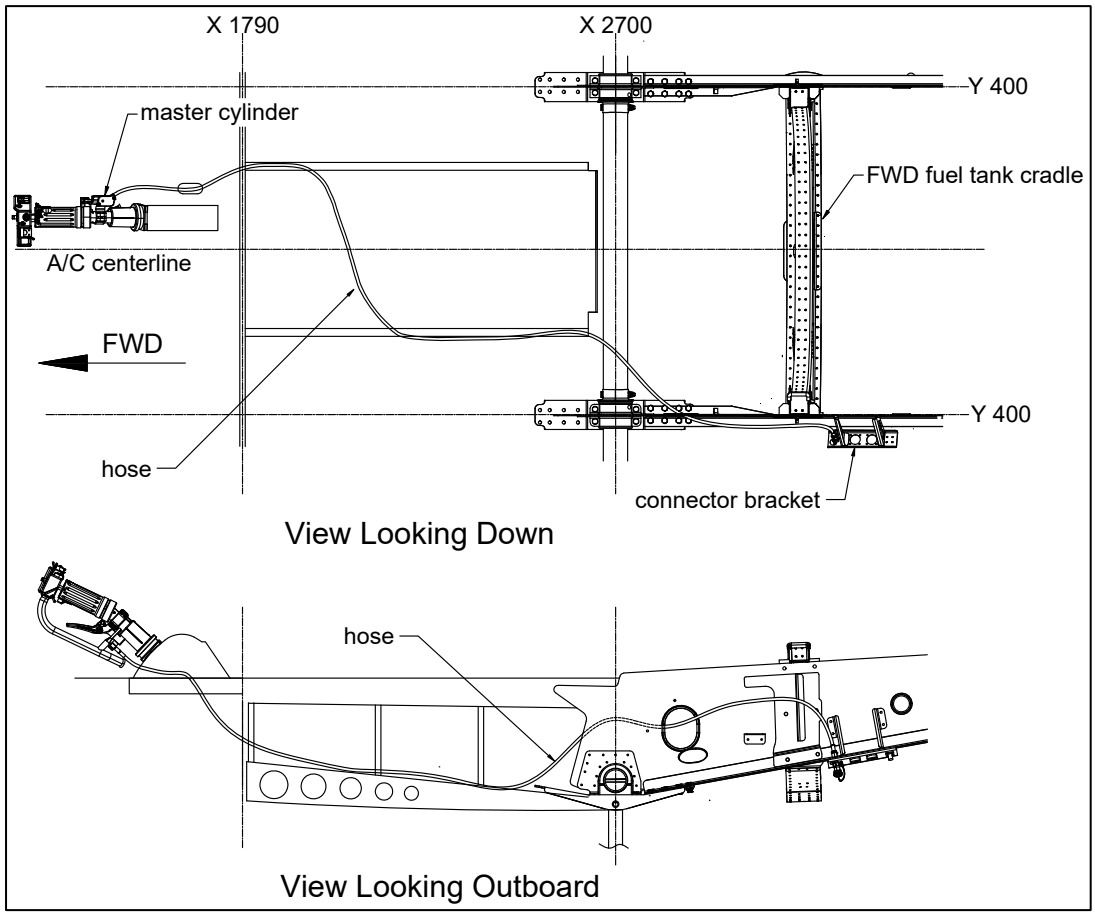

This document is proprietary to Onboard Systems Int'l. Disclosure or reproduction is not allowed. © 2026 Onboard Systems Int'l., all rights reserved.

Install the system per the following. The hydraulic release system is supplied dry.

1. For routing purposes, remove the fitting and nut at the end of the hose at the opposite end of the master cylinder.
2. Disassemble the clamp and the four screws provided pre-assembled on the Master Cylinder Assembly (P/N 232-794-00).
3. Place the Master Cylinder Assembly over the collective tube and re-assemble the clamp with the four screws. Position as shown with respect to the rivet and torque screws to 15 – 17 in-lbs. (do not exceed 17 in-lbs. (2 Nm)).
4. Adjust the lever with a flat screwdriver as necessary to achieve the 30 mm minimum distance shown.

Figure 4.4.2 Master Cylinder Assembly Installation

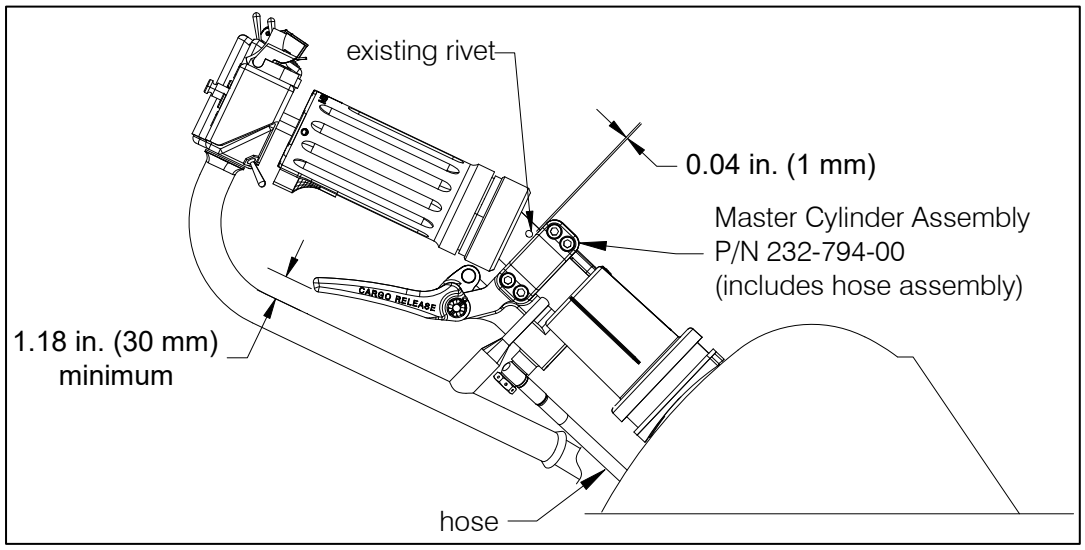

5. Route the hose to underneath the cabin floor through the existing slot that is to the right of the collective base.

This document is proprietary to Onboard Systems Int'l. Disclosure or reproduction is not allowed. © 2026 Onboard Systems Int'l., all rights reserved.

If the slot in the floor is not present, create one with dimensions as shown below in the cabin floor 43 mm from the collective pitch lever unit and 150 mm forward of X1790.15 (see below) and install the grommet (Airbus Helicopters P/N DHS751-160.62).

Figure 4.4.3 Cabin Floor Hole Detail

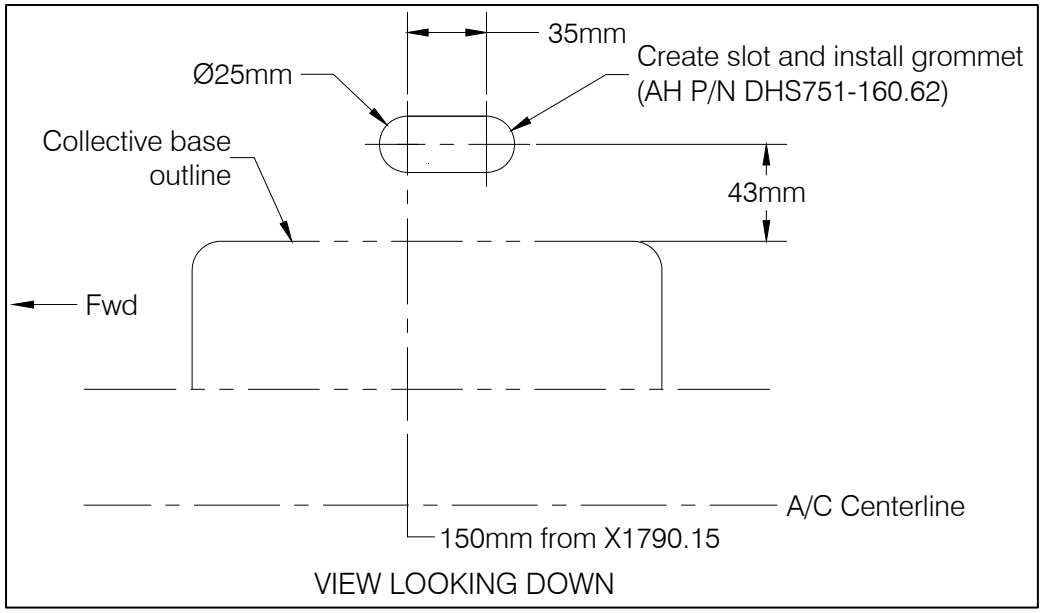

6. Underneath the floor, route the hydraulic hose through the existing hole in the frame (ref. Figure 4.4.4) immediately aft of the collective base. Secure the hose at this point with a cushioned loop clamp (P/N 512-005-00). Fasten the loop clamp to the existing bracket with hardware as illustrated below, depending on the configuration of the Airbus bracket that is installed.

This document is proprietary to Onboard Systems Int'l. Disclosure or reproduction is not allowed. © 2026 Onboard Systems Int'l., all rights reserved.

Figure 4.4.4 Hose Routing at Frame

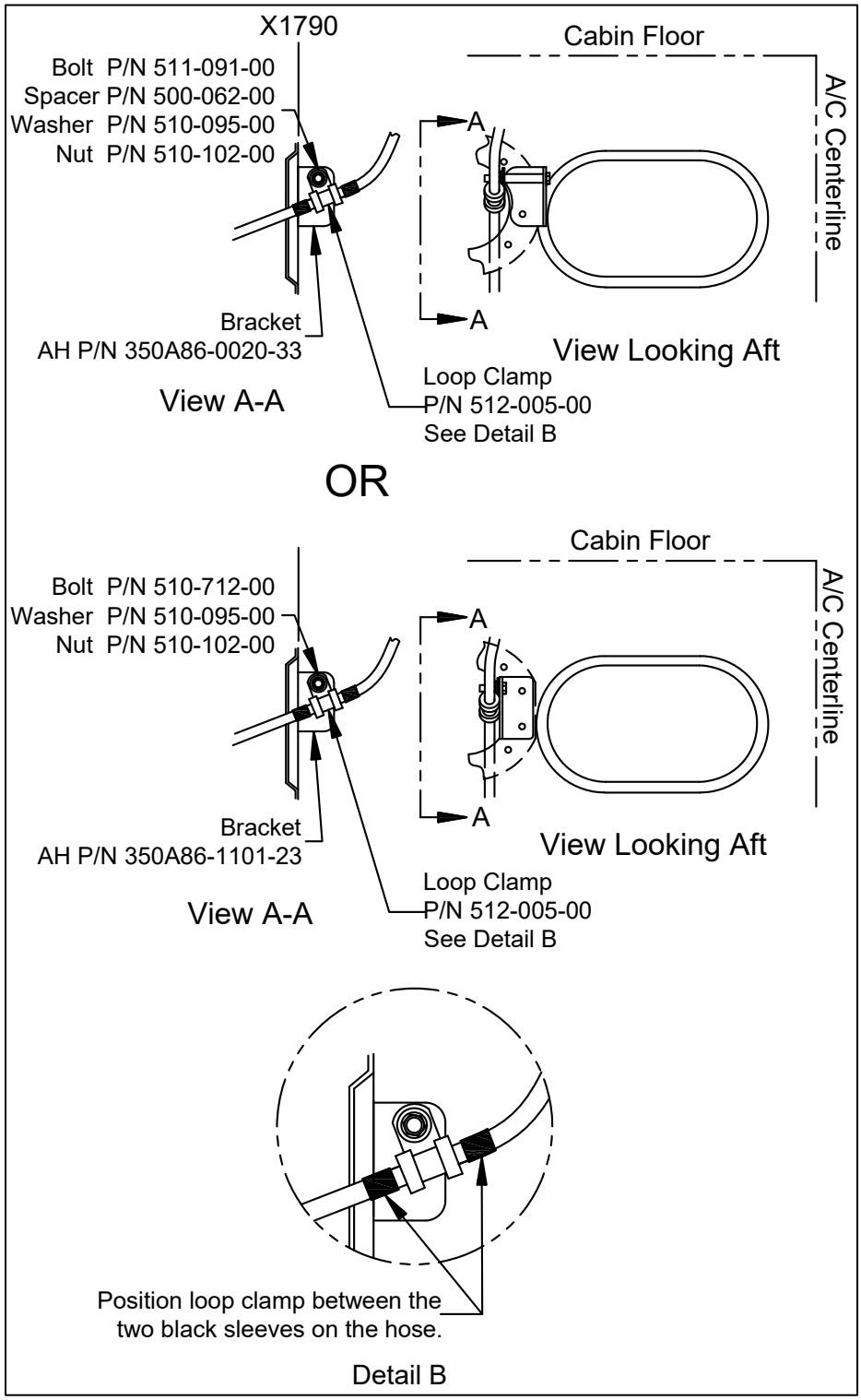

This document is proprietary to Onboard Systems Int'l. Disclosure or reproduction is not allowed. © 2026 Onboard Systems Int'l., all rights reserved.

7. Aft of the frame, attach Bracket (P/N 410-460-00) to the existing hole in frame flange with rivet (P/N 511-238-00). Reference Figure 4.4.5 below.

8. Secure the hose with a cable tie (P/N 512-011-00) to the bracket.

Figure 4.4.5 Hose Attachment Point



9. Route the hose slightly aft and inboard across the aircraft centerline to the identical structural frame on the left side of the aircraft.

10. Route the hose aft and under the lateral structural member (shown in Figure 4.4.6). The black heat shrink on the hose should align to protect against chafing on the frame flanges.

11. Referring to Figure 4.4.6, on the forward and aft side of the structural member cut the cable ties securing the existing electrical harness (as applicable) to the brackets and secure the hose directly to the brackets with the supplied cable ties (P/N 512-011-00). Re-attach the wire harnesses to the hose with the supplied Cable Tie Mounts (P/N 410-457-00).

This document is proprietary to Onboard Systems Int'l. Disclosure or reproduction is not allowed. © 2026 Onboard Systems Int'l., all rights reserved.

Figure 4.4.6 Hose Routing Under Frame

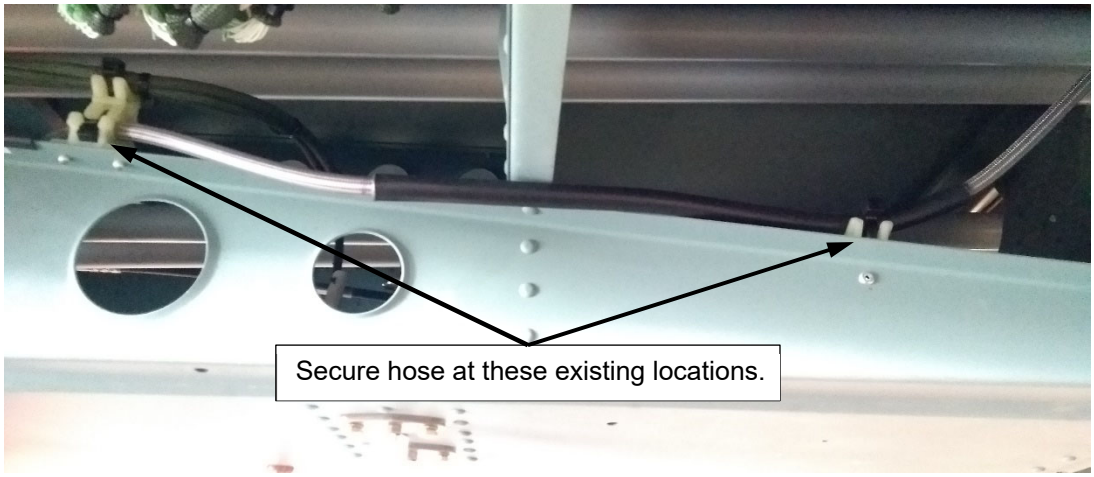

12. Route the hose up and through the existing hole in the aft cabin bulkhead as shown below. Split and install grommet (P/N 505-014-00) in the hole after the hose is routed through.

Figure 4.4.7 Hose Routing Through Aft Bulkhead



13. Aft of the bulkhead, secure it clear from the flight controls in that area and route outboard and through the hole in the LH keel beam (Y400), refer to Figure 4.4.8.

14. Outboard of the keel beam route it aft along the existing electrical harness bundle to the connector bracket. Secure it along the electrical harness bundle in several locations with the Cable Tie Mounts (P/N 410-457-00) and Cable Ties (P/N 512-011-00).

This document is proprietary to Onboard Systems Int'l. Disclosure or reproduction is not allowed. © 2026 Onboard Systems Int'l., all rights reserved.

Figure 4.4.8 Hydraulic Hose Routing to Connector Bracket

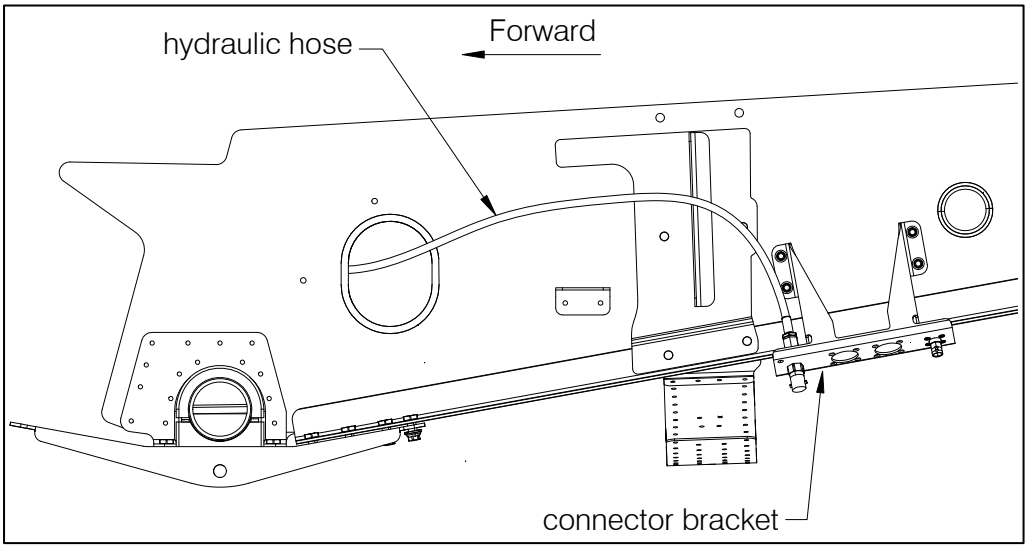

15. Insert the quick disconnect fitting, that was removed earlier, up from underneath the forward hole of the bracket and secure it with the nut. Thread the fitting at the end of the hose assembly onto the quick disconnect fitting and tighten securely.

Figure 4.4.9 Quick Disconnect Fitting to Bracket

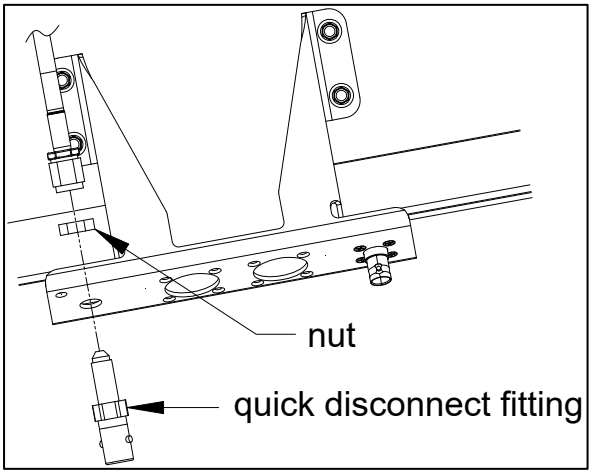

16. Attach the lanyard of the quick disconnect fitting's dust cap** to the adjacent hole in the bracket with the provided screw (P/N 510-959-00) and nut (P/N 510-279-00).
**The dust cap is optional and can be omitted.

This document is proprietary to Onboard Systems Int'l. Disclosure or reproduction is not allowed. © 2026 Onboard Systems Int'l., all rights reserved.

4.5 Shackle Assembly Installation

The Shackle Assemblies (P/N 232-137-01) are included with the Fixed Provisions Kit (P/N 200-468-00) and provide the structural connection for the four suspension cables of the cargo swing to the existing aircraft structure. New Shackle Assemblies are engraved with an "INBOARD" indication, if the engraving is not present the orientation is readily identified as shown in the figure (with the smaller lobe inboard).

1. Attach a Shackle Assembly and Bracket (P/N 235-299-00) to each of the two airframe splice fittings at the forward landing gear (reference Figure 4.4.1) using Airbus hardware (Airbus part numbers are shown in italics). Attach each Bracket on the inboard side of the respective airframe splice fitting with them angled as shown.

2. Tighten the nuts to 12.5 to 17 ft-lbs. (17 – 23 Nm). Verify Shackle Assemblies rotate freely after tightening the nuts.

Figure 4.5.1 Shackle Assembly Installation (Forward Configuration Shown)

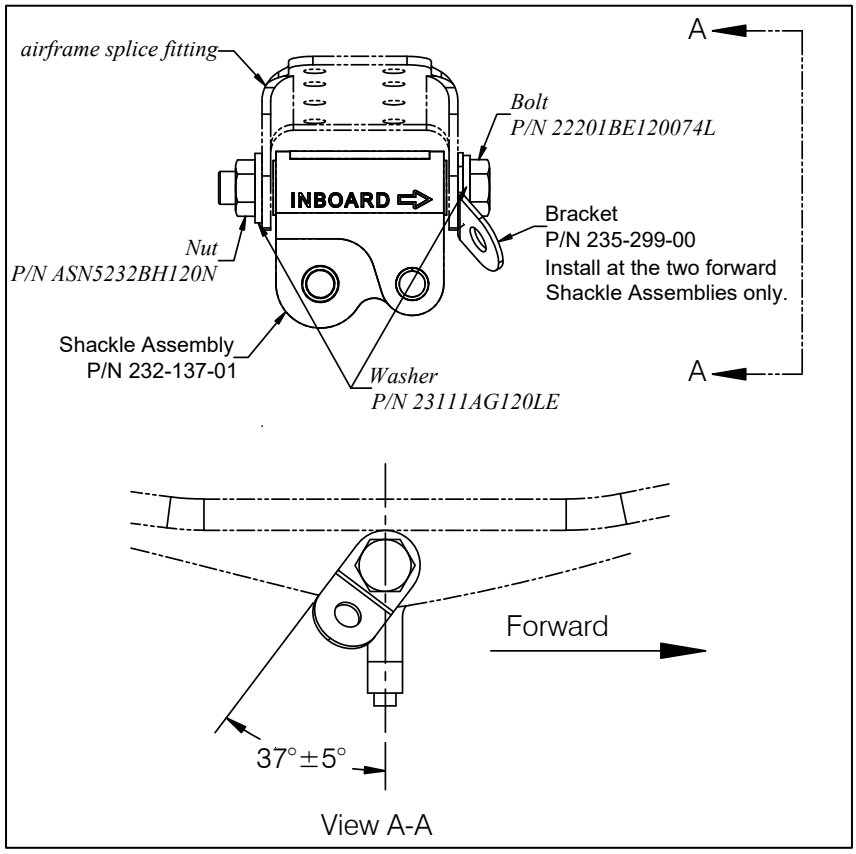

3. Attach a Shackle Assembly at each of the two half-clamp fittings at the aft landing gear (using the same hardware as for the forward Shackle Assemblies).

4. Tighten the nuts to 12.5 to 17 ft-lbs. (17 – 23 Nm). Verify Shackle Assemblies rotate freely after tightening.

This document is proprietary to Onboard Systems Int'l. Disclosure or reproduction is not allowed. © 2026 Onboard Systems Int'l., all rights reserved.

4.6 Cargo Swing Suspension Installation

This section covers the installation of the cargo swing suspension of the Removable Provisions Kit (P/Ns 200-455-00, 200-455-01, or 200-455-02).

Assemble the two Forward Suspension Cable Assemblies (P/N 232-140-01) and two Aft Suspension Cable Assemblies (P/N 232-141-01) onto the Swing Frame Assembly (P/Ns 232-844-00, 232-844-01, or 232-844-02) per the instructions in this section.

The aft end of the Swing Frame Assembly is determined by the orientation of the cargo hook when it is installed. When the Swing Frame Assembly is installed the cargo hook load beam must point to the left side of the helicopter (as shown in the figure below). Thus, the longer Aft Suspension Cable Assemblies must be attached to the swing frame assembly aft attach points as identified below and the Forward Suspension Cable Assemblies attached to the remaining pair of attach points.

Figure 4.6.1 Swing Frame Assembly Orientation

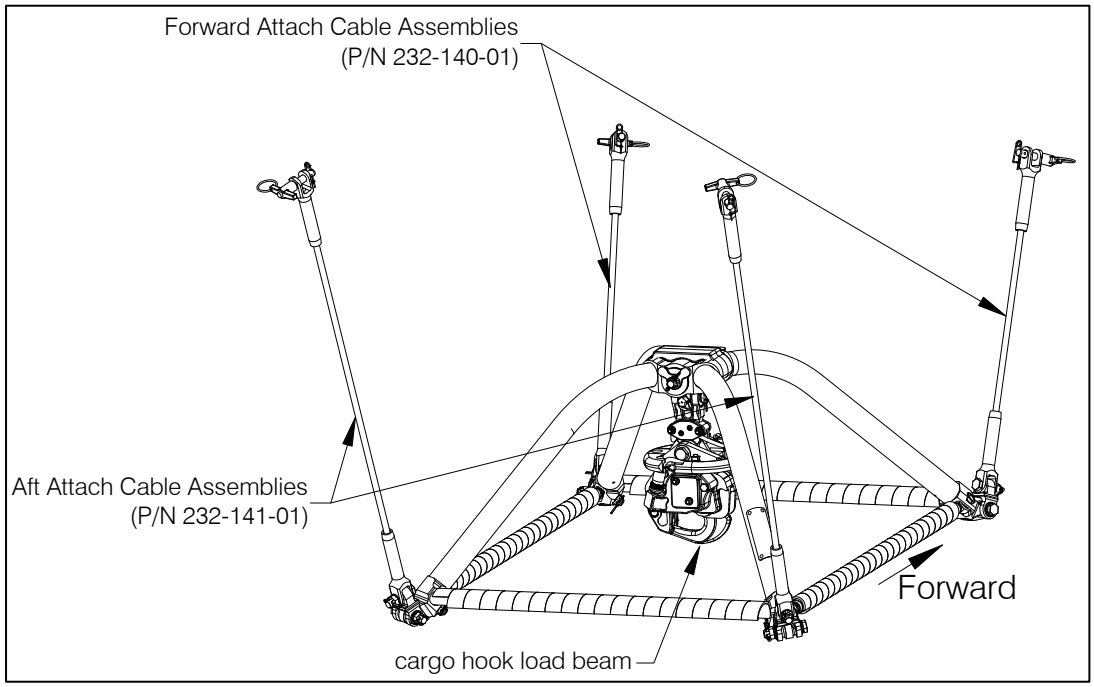

This document is proprietary to Onboard Systems Int'l. Disclosure or reproduction is not allowed. © 2026 Onboard Systems Int'l., all rights reserved.

1. Disassemble the hardware (reference Figure 4.6.2) that is provided pre-assembled onto the cable clevis end.

2. Apply grease to shank of the bolt, recommended grease is Mobilgrease 28 (MIL-PRF-81322) or AeroShell 22 (DCSEA395\GRAISSE G-395).

3. Orient the cable assembly with the bolt head to the inside (as shown below) otherwise the threaded end of the bolt will contact the swing frame. Align the cable clevis end over the swing frame foot and re-assemble the hardware.

4. Tighten the nuts securing the cable assemblies to the frame feet to 95-128 in-lbs. (10.7-14.5 Nm) and rotate to next castellation if necessary to insert cotter pin. Install cotter pin.

5. Repeat with the other three cable assemblies with the two Forward Suspension Cable Assemblies (shorter) attached to the forward frame feet.

Figure 4.6.2 Suspension Cable Attachment to Swing Frame

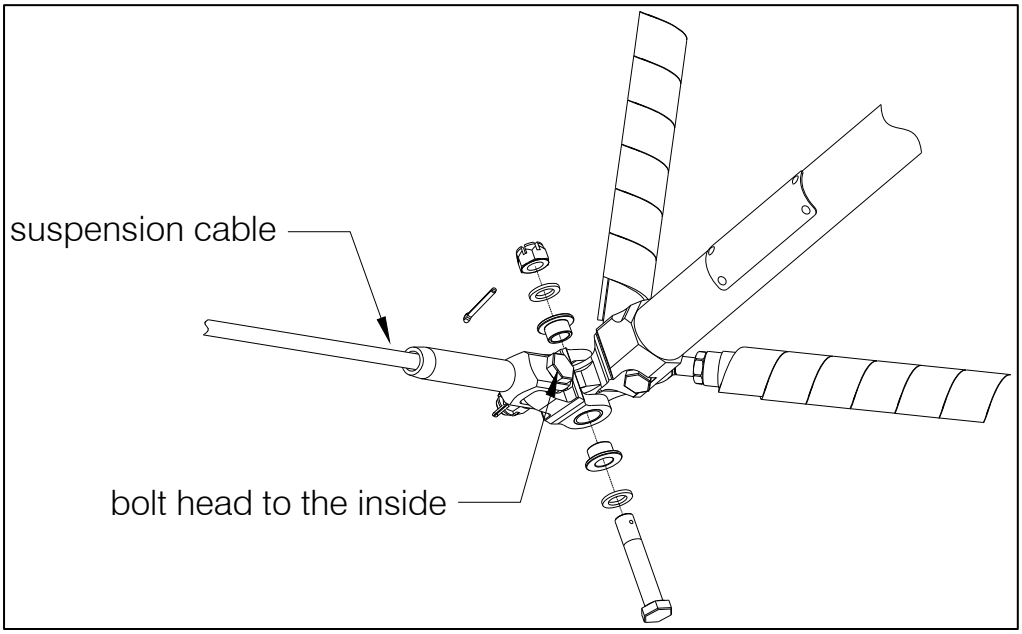

Attach the forward suspension cables to the Shackle Assemblies at the airframe splice fittings at the forward landing gear cross tube and the aft suspension cables to the Shackle Assemblies at the Airbus half clamps at the aft landing gear cross tubes per the following.

This document is proprietary to Onboard Systems Int'l. Disclosure or reproduction is not allowed. © 2026 Onboard Systems Int'l., all rights reserved.

Figure 4.6.3 Swing Suspension Orientation

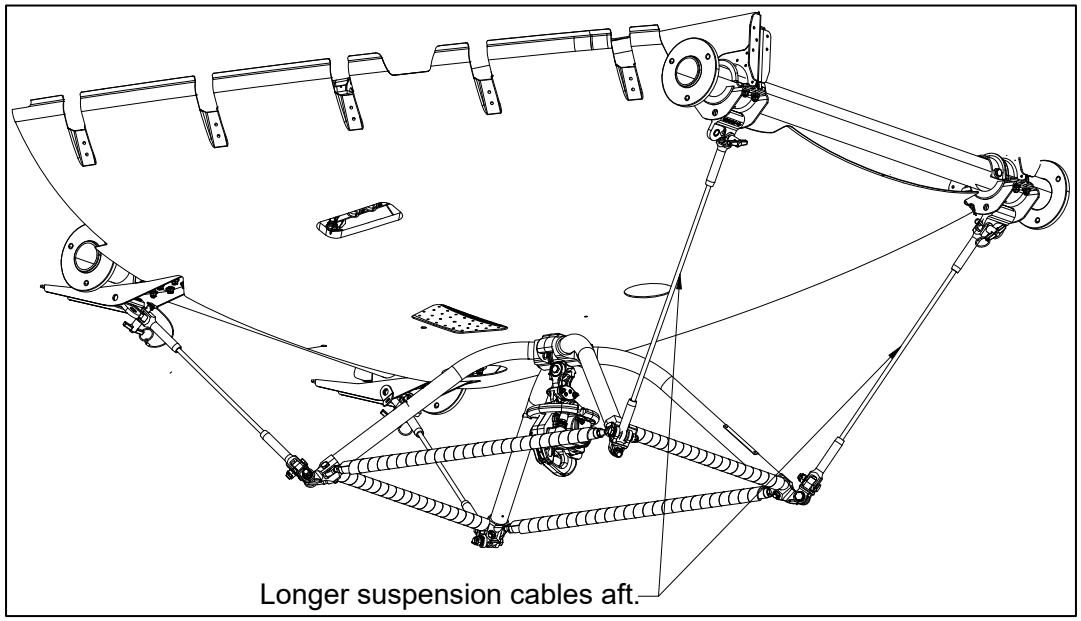

The suspension cables must be attached to the inboard holes of the Shackle Assemblies (the Shackle Assemblies are "keyed" so that the cables can only be attached at one of the holes).

6. Apply a film of grease to the shank of the quick release pin. Recommended grease: Mobilgrease 28 (MIL-PRF-81322) or AeroShell 22 (DCSEA395\GRAISSE G-395).

7. Position the suspension cable clevis over the shackle, align the holes and insert the quick release pin through from underside of the shackle.

8. Insert the attached safety pin through the hole in the end of the quick release pin.

Figure 4.6.4 Cable Attachment

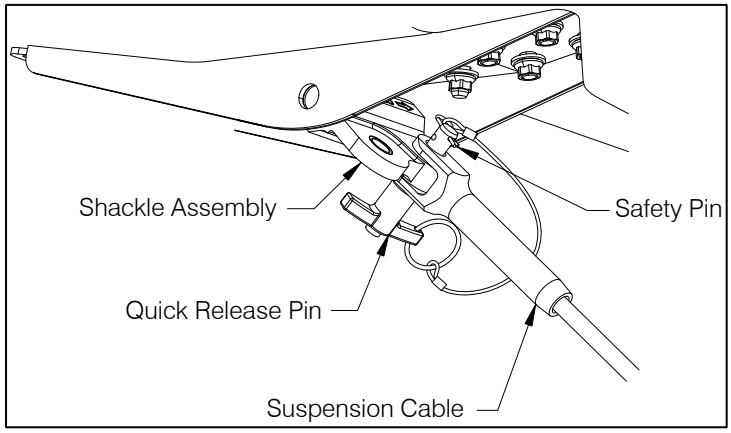

This document is proprietary to Onboard Systems Int'l. Disclosure or reproduction is not allowed. © 2026 Onboard Systems Int'l., all rights reserved.

9. Repeat for each suspension cable.

10. Route the harness, hose, ground strap bundle through the left side of the swing frame assembly to the connector bracket installed at the LH keel beam.

⚠ CAUTION

*Route hose and harness bundle through **left** side (above lateral strut) of swing frame assembly as shown.*

Figure 4.6.5 Hose and Harness Routing from Cargo Hook to Bracket

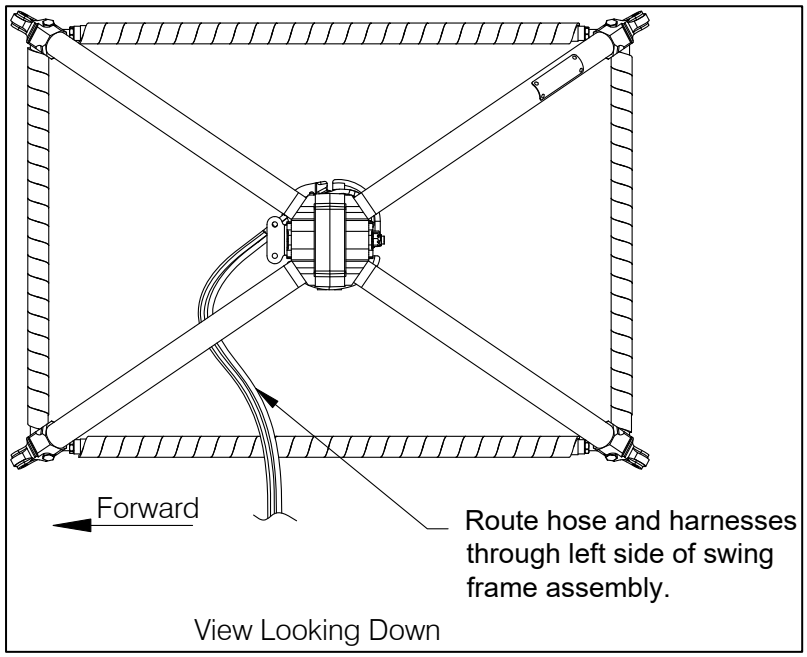

11. Connect the electrical release/load cell Y harness connector to the mating connector on the bracket.

12. Connect the ground strap connector to the mating connector on the connector bracket.

13. Connect the quick disconnect of the hydraulic hose from the cargo hook to the mating connector on the bracket.

14. If spiral wrap (P/N 590-046-00) was provided, wrap the hose and harness bundle starting from the cargo hook bumper and extend it beyond where it can contact the swing frame longitudinal tube.

15. At this point the hydraulic release system can be filled and bled, refer to Section 4.8.

This document is proprietary to Onboard Systems Int'l. Disclosure or reproduction is not allowed. © 2026 Onboard Systems Int'l., all rights reserved.

16. Connect one end of each bungee cord assembly (P/N 490-021-00) to the bracket at the forward side of the upper pivot point of the Swing Frame Assembly.

Figure 4.6.6 Bungee Cord Attachment to Swing Frame

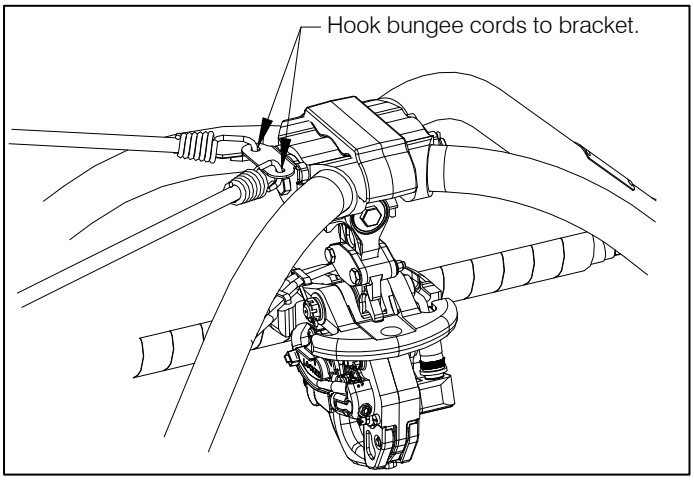

17. Attach the other end of the bungee cord assembly to the brackets (P/N 235-299-00) installed with the forward Shackle Assemblies (at the airframe splice fittings) to tilt the Swing Frame Assembly forward (ref. Figure 4.6.7).

NOTICE

Using the bungee cord assemblies to pull the swing frame forward is part of the system compliance with 14 CFR 27.952.

Figure 4.6.7 Swing Frame Assembly w/ Bungee Cord Assemblies Attached.

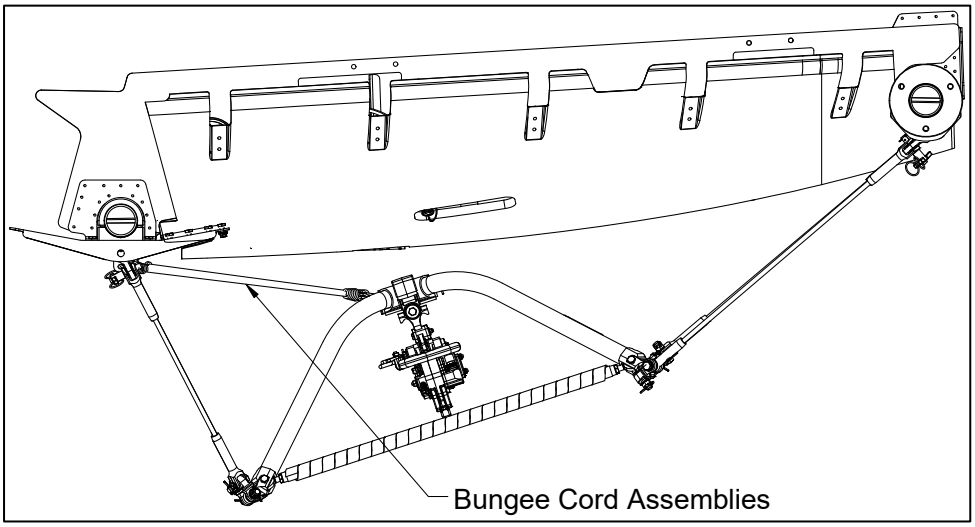

This document is proprietary to Onboard Systems Int'l. Disclosure or reproduction is not allowed. © 2026 Onboard Systems Int'l., all rights reserved.

4.7 Placards

Following table summarizes the placards to be installed (depending on kit configuration).

Table 4.7.1 Placards

Placard Description (Placard P/N)	Installation Location
External Load Limit Decal (215-166-00)	On the belly of the aircraft, near the Cargo Swing, and visible to ground crew.
Surefire Cockpit Decal (215-343-00)	If cargo hook P/N 528-028-02 is installed: near the release switch on the cyclic, in view of the pilot.

This document is proprietary to Onboard Systems Int'l. Disclosure or reproduction is not allowed. © 2026 Onboard Systems Int'l., all rights reserved.

4.8 Hydraulic System Fill and Bleed Procedure

If there is a need to fill and/or bleed the system, follow the procedures listed below. Proper bleeding is critical to the operation of the hydraulic release system. An improperly bled system will not release the cargo hook mechanism.

Filling and bleeding requires two people, one to inject hydraulic fluid through the system and the other to observe the master cylinder reservoir.

A bleed kit (P/N 212-014-02) is provided which consists of 2 oz of MIL-PRF-87257 hydraulic fluid, a syringe, a female barb fitting, a length of PVC tubing, and a bleed adapter fitting. The bleed procedure is as follows.

NOTICE

Any time the Reservoir Lid is removed, clean up any spilled hydraulic fluid. Remove any excess hydraulic fluid from the O-ring groove and around the groove with a lint free swab. The exterior of the Reservoir can be cleaned with alcohol and lint free cloth.

1. Assemble the bleed kit components by press fitting each component together as shown.

Figure 4.8.1 Hydraulic Hook Bleed Kit

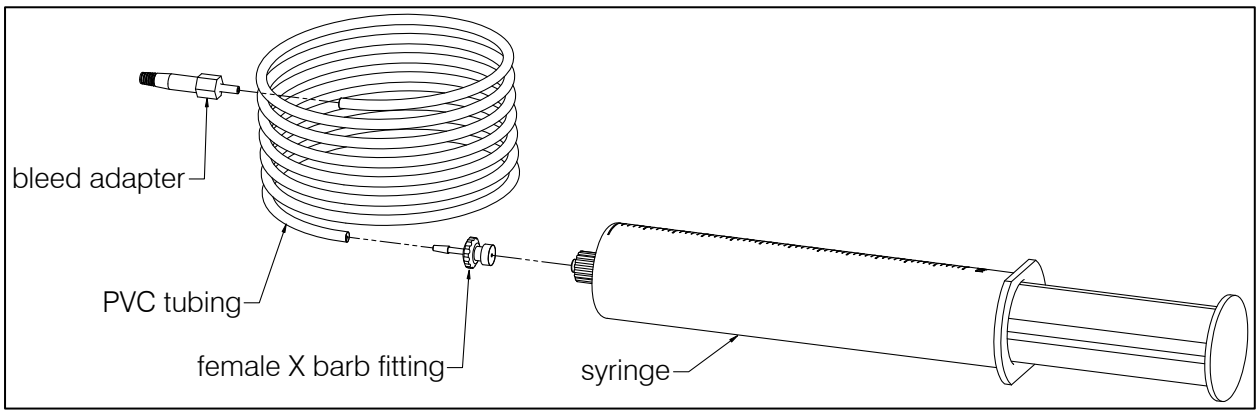

2. Place an absorbent towel under the master cylinder.

This document is proprietary to Onboard Systems Int'l. Disclosure or reproduction is not allowed. © 2026 Onboard Systems Int'l., all rights reserved.

NOTICE

Use best shop practices to keep foreign material out of the hydraulic system. FOD will plug orifices, damage seals and/or scratch sealing surfaces necessitating system rebuild. Use only clean hydraulic fluid from sealed containers.

3. Remove screws, reservoir lid, reservoir seal and baffle plate from the master cylinder reservoir as shown in Figure 4.8.2.

NOTICE

The reservoir seal is for shipping purposes only, do not re-install. Discard or retain for future storage or shipping of the master cylinder.

Figure 4.8.2 Reservoir Disassembly.

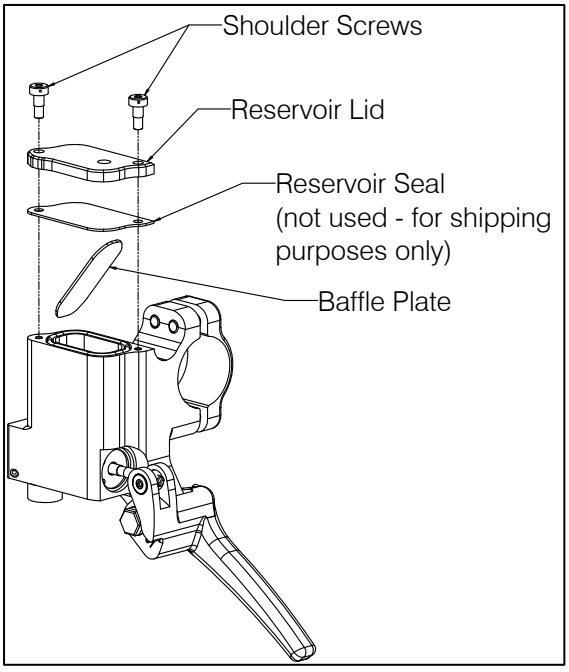

4. Remove the bleed screw, thread seal washer, and washers from the slave cylinder, see Figure 4.8.3.

This document is proprietary to Onboard Systems Int'l. Disclosure or reproduction is not allowed. © 2026 Onboard Systems Int'l., all rights reserved.

Figure 4.8.3 Bleed Screw Removal

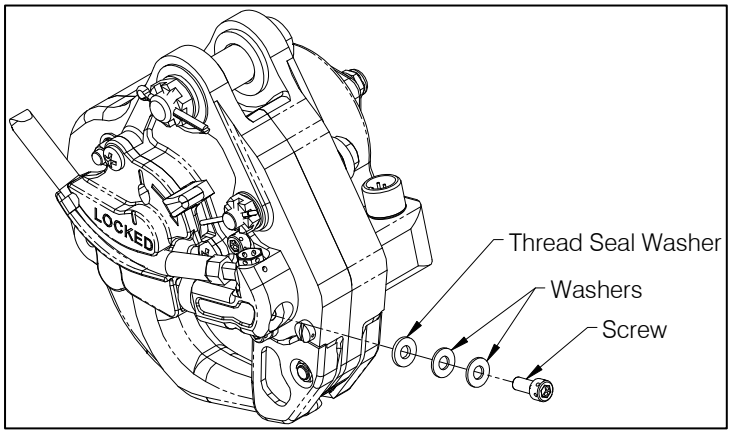

5. Fill the syringe with approximately 35 cc of hydraulic fluid and purge any remaining air in the syringe and tubing. Screw the end of the bleed adapter into the screw hole on the slave cylinder to create a tight seal. See Figure 4.8.4.

6. While observing the reservoir, **slowly** push on the syringe plunger to force fluid through the slave cylinder, hydraulic hose, and up to the master cylinder reservoir. There will be some resistance during filling—this is normal.

CAUTION

Injecting the fluid into the system too rapidly may cause the fluid to spray up and out of the master cylinder reservoir. Wear safety glasses when observing fluid reservoir while filling.

Figure 4.8.4 Injecting Hydraulic Fluid

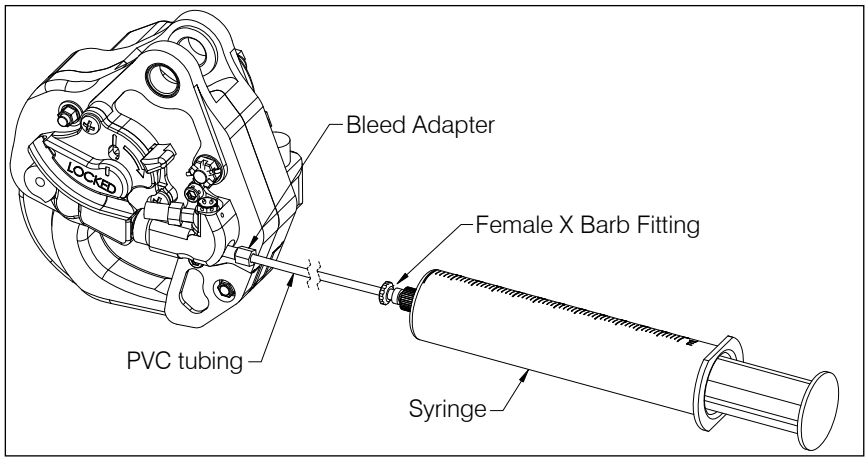

This document is proprietary to Onboard Systems Int'l. Disclosure or reproduction is not allowed. © 2026 Onboard Systems Int'l., all rights reserved.

7. Continue to force fluid into the master cylinder reservoir until the reservoir is approximately half full.

NOTICE

If bleeding an already filled system, you may need to draw fluid from the master cylinder reservoir during this step to prevent overflow.

8. Prepare the thread seal washer, washer and screw for quick assembly into the bleed screw hole when the adapter is removed as fluid will began to drain from the system.
9. Remove the bleed adapter from the screw hole. Re-install the Thread Seal Washer, washers, and screw.
10. Allow the system to rest for several minutes. This will allow any air to rise through the system
11. Very **slowly** pull each release lever on the master cylinder and watch for bubbles. If bubbles are observed rising within the reservoir, continue to slowly cycle the lever until there are no more. Actuating the lever releases air trapped within the master cylinder.

⚠ CAUTION

Pull the lever very slowly! When the reservoir is not baffled and capped, a hard pull will cause fluid to erupt over the edge of the reservoir.

12. Check the system for air by actuating the lever firmly until it bottoms out. Check the push rod position (see Figure 4.8.5). If some of the green area on the push rod is visible, proceed to step 13. If some of the green on the push rod is not visible with the lever completely pulled, the system has too much air in it and needs further bleeding. To do this, repeat steps 5 – 11.

This document is proprietary to Onboard Systems Int'l. Disclosure or reproduction is not allowed. © 2026 Onboard Systems Int'l., all rights reserved.

Figure 4.8.5 Checking System for Air

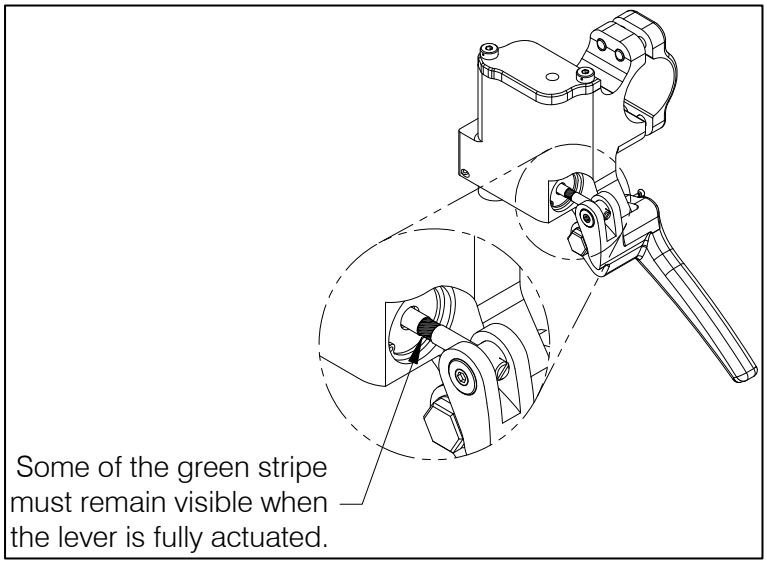

13. After the system is properly bled, re-install the baffle plate and verify that the reservoir is adequately filled with hydraulic fluid. Fluid level should be within the Min/Max circle on the baffle with the reservoir approximately level. Add or draw off fluid as necessary.

Figure 4.8.6 Fluid Level

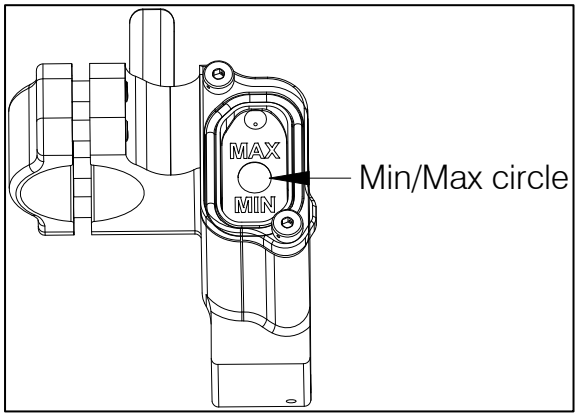

14. Check the system for proper operation. Fully actuate the release lever. The cargo hook must open and the lever must have a firm feel.
15. Re-install the reservoir lid with the two shoulder screws and safety-wire them together.
16. Disassemble and thoroughly clean the bleed kit with isopropyl alcohol. Allow it to dry. Not cleaning the syringe will render it unusable. Re-assemble and store for next use.

This document is proprietary to Onboard Systems Int'l. Disclosure or reproduction is not allowed. © 2026 Onboard Systems Int'l., all rights reserved.

4.9 Installation Check-out

After installation of the swing suspension, perform the following functional checks.

1. Move the cargo hook and swing frame assembly throughout their ranges of motion and ensure that the hydraulic hose and electrical harnesses (electrical release harness and load weigh harness) have enough slack (i.e. – are not pulled tight in any position).

2. Provide power to the electrical release system. Electrical release system operation depends on the cargo hook P/N installed. The following instructions are applicable to cargo hook P/N 528-028-02 which is equipped with Surefire electrical release. With no load on the cargo hook perform the following.

    - Very briefly press the Cargo Release switch, the cargo hook should not actuate and the load beam should remain closed.

    - Press and hold the Cargo Release switch for a few seconds, the load beam should fall to the open position, and the cargo hook solenoid should continue to cycle repeatedly.

    - Push up on the load beam and verify that it latches and the hook lock indicator is aligned with the engraved line on the manual release cover.

    The following instructions are applicable to cargo hook P/N 528-028-00 and 528-028-04.

    - Press and release the Cargo Release switch on the cyclic, the load beam should immediately fall to the open position.

    - Push up on the load beam and verify that it latches and the hook lock indicator is aligned with the engraved line on the manual release cover.

3. With no load on the cargo hook load beam, pull the release lever on the collective to operate the cargo hook hydraulic release, the Cargo Hook should release. Reset the cargo hook load beam.

4. Verify operation of the ground crew release lever on the forward side of the cargo hook. The lever should rotate smoothly, and the cargo hook load beam should open.

5. On startup the C-39 Indicator (if installed, refer to steps 6 – 10 for the C-40 model) will perform a brief self-diagnostic routine and then display the load screen. Set the Installation Zero for the installation and desired units (lbs. or kg) per the instructions contained in Owner's Manual 120-039-00.

6. On startup the C-40 Indicator will display an information screen while performing a brief self-diagnostic routine and then display the load screen. Set the Installation Zero for the installation per the instructions contained in the Owner's Manual 120-152-00.

This document is proprietary to Onboard Systems Int'l. Disclosure or reproduction is not allowed. © 2026 Onboard Systems Int'l., all rights reserved.

7. For the C-40 model: in the Settings menu select desired units (lb or kg), brightness of the display, maximum load, backlight voltage and other settings as preferred (refer to the C-40 Indicator Owner's Manual 120-152-00 for detailed instructions).

NOTICE

One setting that must be set to function properly is the backlight voltage. If the wire for the backlight was connected the backlight voltage must be set to the aircraft circuit voltage (5 VDC or 28 VDC). Setting to the incorrect voltage will not damage the unit; it will either be brighter or dimmer than it should be.

8. Verify the calibration code (Cal Code) entered into the C-40 Indicator matches the calibration code on the load cell. Refer to the C-40 Indicator Owner's Manual 120-152-00 for instructions for checking calibration code.

9. If the C-40 Indicator's ANALOG OUT wire was connected to the VEMD perform the following (with the system on and power to the VEMD):

    - In the C-40 settings menu verify that the C-40 Indicator's Analog Full-Scale setting is set to 9309.

    - Enter the Analog Test setting in the C-40 menu and follow the instructions to initiate a self-test. The load displayed on the VEMD should be 475 lbs (215 kg) for three seconds and then return to 0.

10. The C-40 Indicator records and displays external load time accumulated on the cargo hook to facilitate timely inspection and overhaul of the cargo hook. If this feature is to be used, reset the "Hook Hours" in the Settings menu to zero (the C-40 Indicator undergoes testing after assembly at the factory which "accumulates" 15-18 hours).

11. Perform an EMI ground test per AC 43.13-1b section 11-107. For equipment that can only be checked in flight an EMI flight test may be required.

12. Complete paperwork per Section 4.12. Note the two different STCs that are applicable to this installation and reference the appropriate STC in the logbook entry.

This document is proprietary to Onboard Systems Int'l. Disclosure or reproduction is not allowed. © 2026 Onboard Systems Int'l., all rights reserved.

4.11 Component Weights

The weights of the primary kit components are listed in Table 4.11.1. .

Table 4.11.1 Component Weights & CGs

Component	Weight lbs (kgs)	Longitudinal CG (STA)
Removable Provisions	30.0 lbs (13.6 kg)	133 in. (3375 mm)
Fixed Provisions	6.0 lbs (2.7 kg)	110 in. (2794 mm)
Total	**36.0 lbs (16.3 kg)**	**129.1 (3281 mm)**

4.12 Paper Work

In the US, fill in FAA form 337 for the initial installation and submit to the FAA. Keep a copy for aircraft records. This procedure may vary in different countries. Make the appropriate aircraft logbook entry, enter the applicable STC no. depending on the AS350B3's fuel system configuration (refer to Airbus SIN No. 3281-S-28 for details):

Fuel system configuration:	Applicable STC No.
RRFT	SR02762SE
CRFS (per Airbus mod 07.20034)	SR02719SE

Insert the Rotorcraft Flight Manual Supplement 121-071-00 in the Rotorcraft Flight Manual.

This document is proprietary to Onboard Systems Int'l. Disclosure or reproduction is not allowed. © 2026 Onboard Systems Int'l., all rights reserved.

5.0 Retrofit Kit Installation for P/N 200-280-03

Retrofit Kit P/N 200-469-00 is for converting kit P/Ns 200-280-03, 200-280-07, and 200-280-08 approved under Onboard Systems STC SR01164SE to an installation that is compliant with FAA regulation 27.952 (crash resistant fuel systems) when installed on an AS350B3 with an Airbus Helicopters CRFS as specified in Section 3 of this manual. The retrofit kit uses many of the parts that are approved under this STC SR02719SE. After the retrofit, the manuals of this STC are applicable. Modify the removable provisions and the fixed provisions per the following sections.

5.1 Removable Provisions Retrofit

1. Note the forward end of the swing suspension assembly and remove it from the aircraft by removing the quick release pins at each suspension cable attachment to the respective Shackle Assembly (P/N 232-137-01) at the hardpoint.

2. Remove the cotter pin at the bolt through the upper pivot point of the swing frame assembly and remove the nut and bolt. Discard the bolt.

3. Place the supplied Bracket (P/N 235-170-00) over the forward side of the upper pivot point (in the orientation shown below) and insert the supplied longer bolt (P/N 510-676-00) through.

4. Re-install the nut over the longer bolt and tighten to 20 ft-lbs, then rotate to next castellation to insert cotter pin, do not exceed 30 ft-lbs. Back off to previous castellation if torque exceeds 30 ft-lbs. Install supplied cotter pin (P/N 510-178-00).

Figure 5.1.1 Bracket Installation

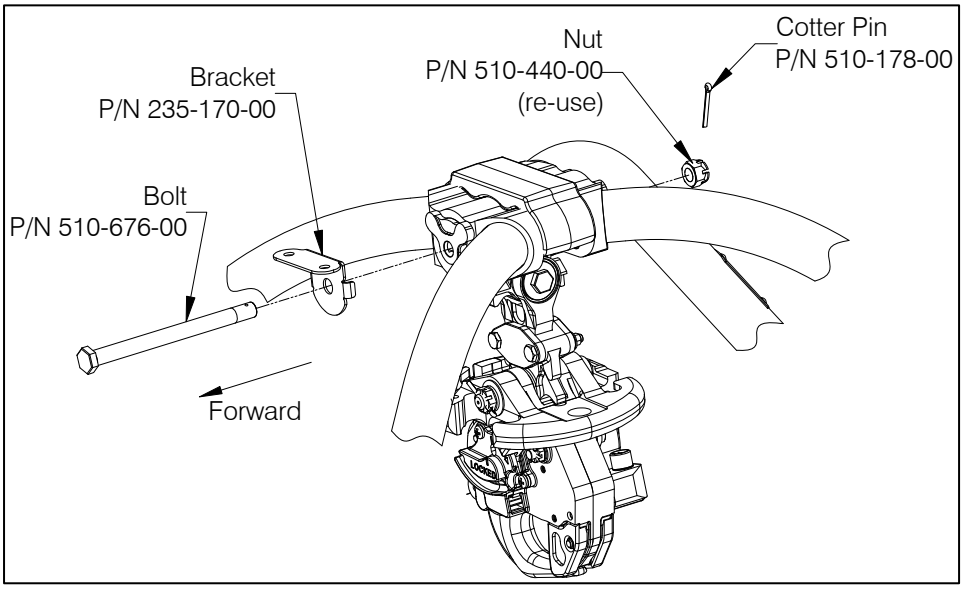

5. Cut the cable ties that secure the hydraulic hose, electrical harnesses, and ground strap to the bumper.

This document is proprietary to Onboard Systems Int'l. Disclosure or reproduction is not allowed. © 2026 Onboard Systems Int'l., all rights reserved.

6. Disconnect the electrical release harness connector from the cargo hook (the connector can be removed without removing the bumper). An additional cotter pin (P/N 510-178-00) is included in the kit if the bumper is removed to facilitate disassembly.

7. Remove the slave cylinder assembly and its plumbing assembly from the cargo hook by cutting the safety wire between the two screws securing it to the side plate and removing the two screws. Cut the cable tie securing the hose within the groove on the manual release cover.

8. Remove the ground strap by removing the screw securing its ring terminal to the cargo hook.

9. Install the provided Slave Cylinder Assembly w/ Plumbing (P/N 232-829-00), re-using the two screws and tightening them to 20-25 in-lbs. Safety wire them together.

10. Install the provided Ground Strap (P/N 270-285-00) at the same location as the ground strap that was removed, re-using the screw.

11. Connect the longer supplied Retrofit Harness (P/N 270-295-00) to the Cargo Hook connector.

12. Route the hose through the groove in the manual cover and secure with cable tie (P/N 512-011-00).

13. Route the hose through bumper with the ground strap and the electrical harnesses.

14. Connect the short leg of the Retrofit Harness to the load cell connector.

Figure 5.1.2 Hose/Harness Routing through Bumper

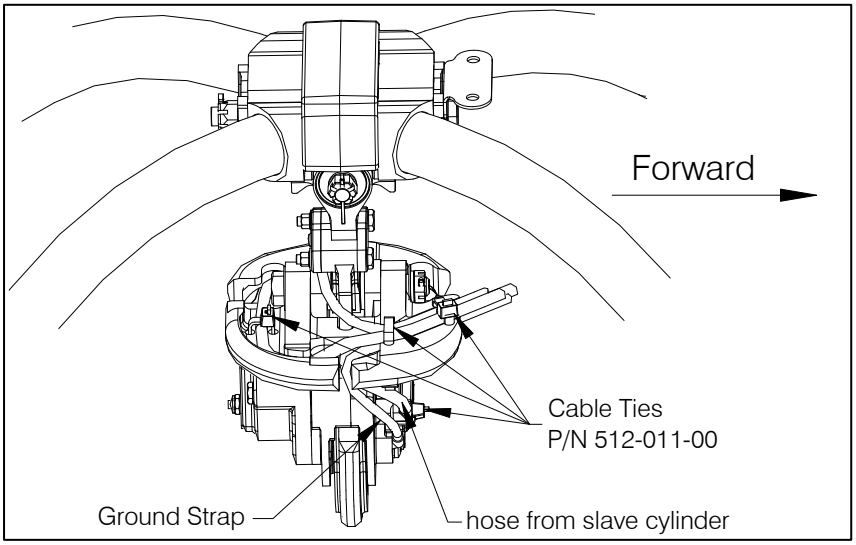

This document is proprietary to Onboard Systems Int'l. Disclosure or reproduction is not allowed. © 2026 Onboard Systems Int'l., all rights reserved.

5.2 Fixed Provisions Retrofit

Modification of the 200-280-03 fixed provisions include installation of a new connector bracket on the outboard side of the LH keel beam, modifying the existing fixed electrical harnesses to terminate at the new bracket, replacing the hydraulic hose from the master cylinder to this new bracket with a shorter one, and installing brackets at the airframe splice fittings to connect bungee cord assemblies. The aircraft belly panel also requires a new hole below the connector bracket.

NOTICE

In addition to the modifications to the cargo hook kit parts, the belly panel requires modification to create another hole to accommodate the new connector bracket location. Refer to Section 4.1 for instructions.

1. Remove the existing fixed ground strap that terminates to 3N ground connector screw and discard.

2. Remove the electrical connectors and hydraulic quick disconnect fitting from the existing connector bracket at the forward fuel tank cradle and remove the connector bracket.

3. Remove the internal hydraulic hose (master cylinder plumbing) all the way up to the banjo bolt fitting at the master cylinder assembly on the collective. Remove the quick disconnect fitting from the end of the plumbing assembly for re-use with the new master cylinder plumbing.

4. Install the connector bracket (P/N 232-845-00) on the outboard side of the LH keel beam per section 4.1.1 of this manual. On some AS350B3s an EMI filter (and its associated mounting brackets) for the fuel pump may be present at this location, if the CRFS is installed this bracket is removed. Otherwise contact Airbus for removal instructions.

5. Install the Bungee Brackets (P/N 235-299-00) at the inboard side of the airframe splice fittings (to which the forward Shackle Assemblies attach) per section 4.5.

6. Assemble the supplied master cylinder plumbing (P/N 232-796-00) onto the master cylinder as shown below, do not attach the quick disconnect fitting until after the hose is routed through the airframe to the bracket.

7. Position the hose at an angle of approximately 25°/30° outboard (to the right) from aircraft centerline and torque the banjo bolt to 60 ± 2 in-lbs.

This document is proprietary to Onboard Systems Int'l. Disclosure or reproduction is not allowed. © 2026 Onboard Systems Int'l., all rights reserved.

Figure 5.2.1 Plumbing Attachment to Master Cylinder Assembly

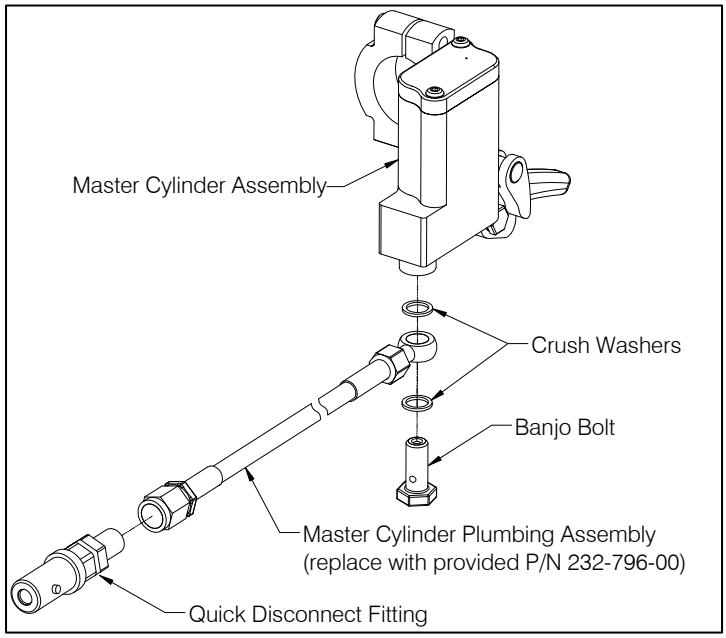

8. Route the hose through the airframe and secure it to the connector bracket per Section 4.4 of this manual.

The electrical harnesses (load weigh and cargo release) are to be shortened to the new connector bracket location and terminated to one connector (P/N 410-455-00). Modify these per the following.

NOTICE

The C-39 Indicator's analog output signal is not compatible with the VEMD.

9. Cut the ME5E (cargo release) and the ME87E (load cell) wires to length to terminate at the new connector bracket location.

10. Prep the ME87E wire by stripping the outer jacket back 1.5" and cutting the shield back 1.25". Install the supplied shield termination (P/N 410-199-00) over the exposed shield and using a heat gun, shrink in place. Cut the shield termination wire to length of the surrounding wires.

11. Strip the individual wires of ME87E and crimp on contacts (P/N 410-456-00).

12. Prep the two ME5E wires by stripping its jacket and shield back .5" and strip the individual wires for contacts and crimp on contacts (P/N 410-397-00). The shield of ME5E does not get terminated to the new connector.

This document is proprietary to Onboard Systems Int'l. Disclosure or reproduction is not allowed. © 2026 Onboard Systems Int'l., all rights reserved.

13. Slide the ME5E and ME87E wires through the supplied shrink boot (P/N 450-121-00), backshell (P/N 410-452-00), and 2" long heat shrink tubing (P/N 450-164-00) and terminate the wires to the connector per the schematic in sections 4.2 and 4.3 (with the exception of the WH/BLK wire which may not be present and is for a future C-40 feature, this wire is not applicable). Assemble backshell over connector, slide shrink tubing up to backshell and shrink in place with heat gun and shrink the boot in place over the end of the backshell.

14. Attach the connector to the aft electrical connector hole position with the four screws (P/N 510-700-00) and Perimeter Mounting Flange (P/N 511-235-00).

15. Install the modified lower fairing and ensure adequate clearance for the connectors.

5.3 Connect Removable Provisions to Fixed Provisions

1. Re-attach the structural cables of the Swing Frame Assembly to the four Shackle Assemblies, referring to Section 4.6.

2. Connect the electrical harness from the cargo hook and load cell to the connector on the connector bracket.

3. The provided harness P/N 270-295-00 includes a short leg terminated with a connector to connect to and extend the existing load cell's harness. Connect these two connectors.

4. Connect the ground strap to the BNC connector on the connector bracket.

5. Connect the slave cylinder plumbing to the mating quick disconnect on the connector bracket.

6. Connect one end of a Bungee Cord Assembly (P/N 490-021-00) to the Bracket (P/N 235-170-00) at the Swing Frame Assembly and the other end to a Bracket (P/N 235-299-00) installed at the inboard side of the airframe splice fitting. Connect the 2nd Bungee Cord Assembly from the Bracket at the Swing Frame Assembly to the Bracket at the opposite side airframe splice fitting.

7. Fill and bleed the hydraulic release system per Section 4.8.

8. Perform the installation check-out per Section 4.9.

This document is proprietary to Onboard Systems Int'l. Disclosure or reproduction is not allowed. © 2026 Onboard Systems Int'l., all rights reserved.

6.0 Retrofit Kit Installation for 200-280-01 and 200-280-04

Retrofit Kit P/N 200-479-00 is for converting kit P/Ns 200-280-01 and 200-280-04 approved under Onboard Systems STC SR01164SE to an installation that is compliant with FAA regulation 27.952 (crash resistant fuel systems) when installed on an AS350B3 with an Airbus Helicopters CRFS as specified in Section 3 of this manual. Kit P/N 200-280-01 and 200-280-04 include cargo hook P/Ns 528-023-01 and 528-029-00 respectively which use a mechanical release cable for backup release, these installations are not CRFS compliant. After the retrofit, the manuals of this STC are applicable. Modify the removable provisions and the fixed provisions per the following sections.

6.1 Removable Provisions Retrofit for 200-280-01 and 200-280-04

1. Note the forward end of the swing suspension assembly and remove it from the aircraft by removing the quick release pins at each suspension cable attachment to the respective Shackle Assembly (P/N 232-137-01) at the hardpoint.

2. Remove the cotter pin at the bolt through the upper pivot point of the swing frame assembly (refer to Figure 5.1.1) and remove the nut and bolt. Discard the bolt and nut.

3. Place the supplied Bracket (P/N 235-170-00) over the forward side of the upper pivot point and insert the supplied longer bolt (P/N 510-676-00) through.

4. Install nut (P/N 510-718-00) over the longer bolt and tighten to 20 ft-lbs., then rotate to next castellation to insert cotter pin, do not exceed 30 ft-lbs. Back off to previous castellation if torque exceeds 30 ft-lbs. Install cotter pin (P/N 510-178-00).

5. Cut the cable ties securing the electrical harnesses and ground strap to the cargo hook bumper and remove the existing cargo hook (P/N 528-023-01 or P/N 528-029-00) and cargo hook bumper from the swing suspension assembly by removing the cotter pin, nut, and washer from the end of the cargo hook attach bolt and removing the attach bolt and washers. Retain the attach bolt, nut, and washers. The removed bumper, cargo hook, electrical release harness, ground strap, and manual release cable are no longer used.

6. Attach the Slave Cylinder w/ Plumbing P/N 232-829-00 to the supplied Cargo Hook P/N 528-028-00 with the two screws P/N 510-531-00 (refer to Figure 6.1.1). Torque to 20-25 in-lbs. Route the hydraulic hose through the groove in the manual release cover and secure with cable tie P/N 512-011-00 through the hole in the cover. Safety wire the two screws together by routing the wire around the backside of the slave cylinder.

7. Remove anodize around tapped hole, touch up the bare metal with a chemical conversion coating (e.g. - Alodine 1201) and attach ground strap (P/N 270-285-00) to the cargo hook re-using the screw from the removed cargo hook.

This document is proprietary to Onboard Systems Int'l. Disclosure or reproduction is not allowed. © 2026 Onboard Systems Int'l., all rights reserved.

Figure 6.1.1 Ground Strap and Slave Cylinder Attachment

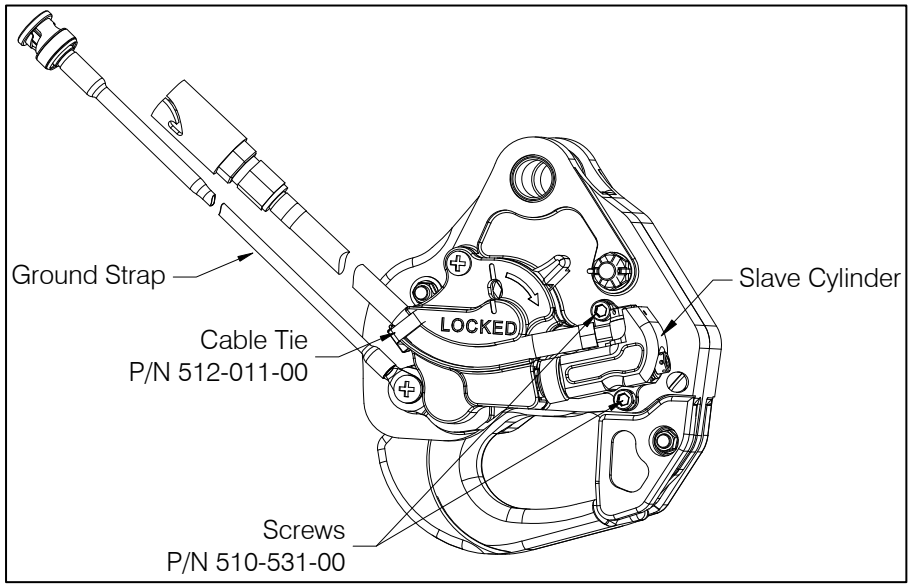

8. Connect the electrical harness P/N 270-295-00 connector to the mating cargo hook connector.

9. Position the Bumper (P/N 290-839-02) over the cargo hook and align its hole with the cargo hook and the load cell on the swing frame assembly and secure with the attach bolt and hardware shown, re-using the attach bolt, washers and nut with the provided cotter pin P/N 510-178-00.

Figure 6.1.2 Cargo Hook Attachment

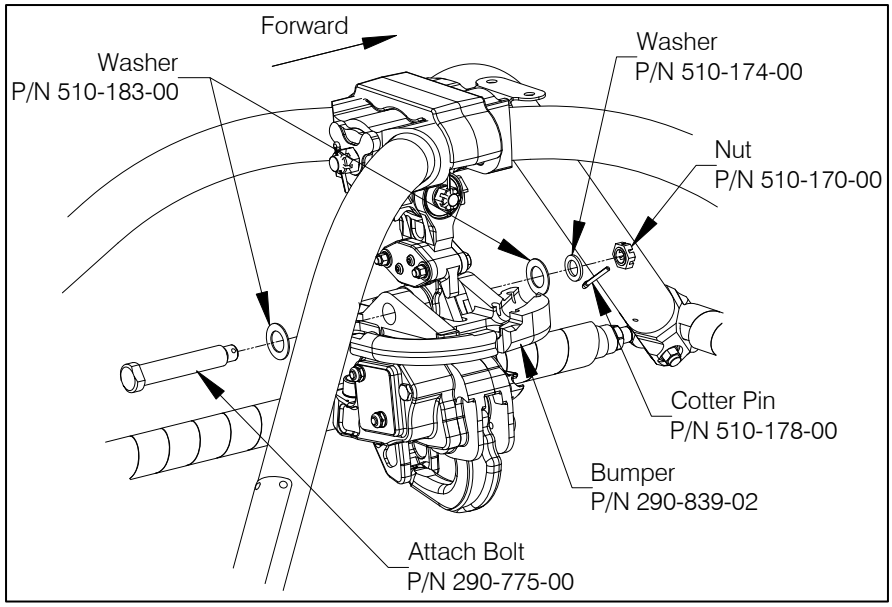

This document is proprietary to Onboard Systems Int'l. Disclosure or reproduction is not allowed. © 2026 Onboard Systems Int'l., all rights reserved.

10. Route hose, cargo release harness, load cell harness and ground strap through groove in Bumper and secure with cable ties (P/N 512-011-00), refer to Figure 5.1.2.

11. The provided harness P/N 270-295-00 includes a short leg terminated with a connector to connect to and extend the existing load cell's harness. Connect these two connectors.

6.2 Fixed Provisions Retrofit for 200-280-01 and 200-280-04

Modification of the 200-280-01 and 200-280-04 fixed provisions include installation of a new connector bracket on the outboard side of the LH keel beam, modifying the existing fixed electrical harnesses to terminate at the new bracket, replacing the mechanical release cable with the Master Cylinder w/ Plumbing, and installing brackets at the airframe splice fittings to connect bungee cord assemblies. The aircraft's lower fairing also requires a new hole below the connector bracket.

NOTICE

In addition to the modifications to the cargo hook kit parts, the belly panel requires modification to create another hole to accommodate the new connector bracket location. Refer to Section 4.1 for instructions.

1. Remove the manual release cable from the bracket on the right side of the belly and remove the bracket.

2. Remove the aft lower fairing from the aircraft.

3. Remove the manual release cable up to the collective and remove the release lever assembly from the collective.

4. Remove the existing fixed ground strap that terminates to the 3N ground connector screw and discard.

5. Remove the electrical connectors from the existing connector bracket at the forward fuel tank cradle and remove the connector bracket.

6. Install the connector bracket (P/N 232-845-00) on the outboard side of the LH keel beam per section 4.1.1 of this manual. On some AS350B3s an EMI filter (and its associated mounting brackets) for the fuel pump may be present at this location, if the CRFS is installed this bracket is removed. Otherwise contact Airbus for removal instructions.

7. Install the Bungee Brackets (P/N 235-299-00) at the inboard side of the airframe splice fittings (to which the forward Shackle Assemblies attach) per section 4.5.

This document is proprietary to Onboard Systems Int'l. Disclosure or reproduction is not allowed. © 2026 Onboard Systems Int'l., all rights reserved.

8. Install the supplied Master Cylinder w/ Plumbing (P/N 232-794-00) and route its hydraulic hose per Section 4.4.

9. Modify the wire harnesses per Section 5.2, steps 9 through 15.

10. Install the modified lower fairing and ensure adequate clearance for the connectors.

6.3 Connect Removable Provisions to Fixed Provisions

1. Re-attach the structural cables of the Swing Frame Assembly to the four Shackle Assemblies, referring to Section 4.6.

2. Connect the electrical harness from the cargo hook and load cell to the connector on the connector bracket. Harness, ground strap and slave cylinder plumbing are to be routed through the left side of the Swing Frame Assembly as shown in Figure 4.6.5.

3. Connect the ground strap to the BNC connector on the connector bracket.

4. Connect the slave cylinder plumbing to the mating quick disconnect on the connector bracket.

5. Wrap the electrical harness, ground strap, and slave cylinder plumbing with spiral wrap (P/N 590-046-00), starting from their exit point at the hook bumper and cutting to length as necessary for satisfactory routing.

6. Connect one end of a Bungee Cord Assembly (P/N 490-021-00) to the Bracket (P/N 235-170-00) installed at the Swing Frame Assembly and the other end to a Bracket (P/N 235-299-00) installed at the inboard side of the airframe splice fitting. Connect the 2nd Bungee Cord Assembly from the Bracket at the Swing Frame Assembly to the Bracket at the opposite side airframe splice fitting.

7. Fill and bleed the hydraulic release system per Section 4.8.

8. Perform the installation check-out per Section 4.9.

This document is proprietary to Onboard Systems Int'l. Disclosure or reproduction is not allowed. © 2026 Onboard Systems Int'l., all rights reserved.

7.0 Operation Instructions

Refer to Owner's Manual 120-152-00 for operation instructions and changing settings for the C-40 load indicator or if the C-39 model is installed, refer to Owner's Manual 120-039-00. Refer to the RFMS 121-071-00 for pre-flight operational checks and rigging guidance for the cargo hook.

7.1 Cargo Hook Loading

The cargo hook can easily be loaded with one hand. A load is attached to the cargo hook by pushing the ring upward against the upper portion of the load beam throat, as illustrated in Figure 7.1.1, until an internal latch engages the load beam and latches it in the closed position.

Figure 7.1.1 Cargo Hook Loading

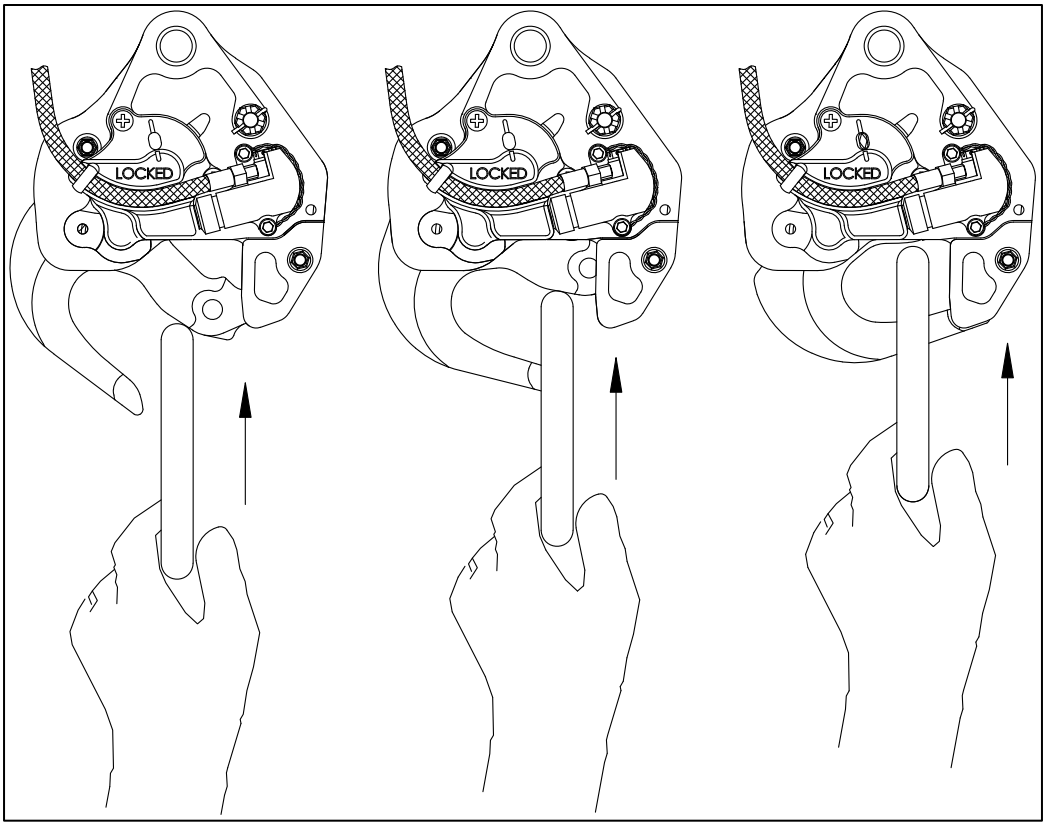

This document is proprietary to Onboard Systems Int'l. Disclosure or reproduction is not allowed. © 2026 Onboard Systems Int'l., all rights reserved.

8.0 Maintenance

Refer to the Instructions for Continued Airworthiness (ICA) manual 123-051-00 for maintenance of the cargo hook kits. For repair and overhaul of the cargo hook refer to Cargo Hook Component Maintenance Manual (CMM) 122-015-00.

8.1 Instructions for Returning Equipment to the Factory

If an Onboard Systems product must be returned to the factory for any reason (including returns, service, repairs, overhaul, etc.) obtain a Return Merchandise Authorization (RMA) number before shipping your return.

NOTICE

An RMA number is required for all equipment returns.

To obtain an RMA, please use one of the listed methods.

- Contact Technical Support by phone or e-mail: (Techhelp@OnboardSystems.com).
- Generate an RMA number at our website: https://www.onboardsystems.com/support/rma

After you have obtained the RMA number, please be sure to:

1. Package the component carefully to ensure safe transit.
2. Write the RMA number on the outside of the box or on the mailing label.
3. Include the RMA number and reason for the return on your purchase or work order.
4. Include your name, address, phone and fax number and e-mail (as applicable).
5. Return the components freight, cartage, insurance and customs prepaid to:

   Onboard Systems International, LLC
   13915 NW 3rd Court
   Vancouver, Washington 98685
   USA
   Phone: 360-546-3072

This document is proprietary to Onboard Systems Int'l. Disclosure or reproduction is not allowed. © 2026 Onboard Systems Int'l., all rights reserved.

9.0 Certification

9.1 FAA STC SR02719SE

United States of America
Department of Transportation
Federal Aviation Administration

Supplemental Type Certificate

Number: **SR02719SE**

This certificate issued to: Onboard Systems International
13915 NW 3rd Court
Vancouver, WA 98685

Certifies that the change in the type design for the following product with the limitations and conditions therefore as specified hereon meets the airworthiness requirements of Part 27 *of* Federal Aviation Regulations.

Original Product Type Certificate Number: H9EU

Make: Airbus Helicopters

Model: AS350B3

Description of Type Design Change:

Installation of Onboard Systems International Cargo Swing Suspension System in accordance with the Master Drawing List (MDL) No. 155 216 00, Revision 2, dated March 30, 2021, or later Federal Aviation Administration (FAA) approved revision. Maintained in accordance with the Instructions for Continued Airworthiness (ICA) No. 123-051-00, Revision 0, dated March 4, 2021 or later FAA-accepted revision. Operated in accordance with the RFMS, No. 121-071-00, Revision 0, dated April 27, 2021 or later FAA-approved revision.

Limitations and Conditions:

Approval of this change in type design applies only to those AS350B3 rotorcraft that are equipped with Crash Resistant Fuel System (CRFS) per Airbus modification 07.20034. This approval should not be extended to (continued)

This certificate and the supporting data which is the basis for approval shall remain in effect until surrendered, suspended, revoked, or a termination date is otherwise established by the Administrator of the Federal Aviation Administration.

Date of Application: October 26, 2020 *Date Reissued:* July 16, 2021

Date of Issuance: June 3, 2021 *Date Amended:*

By Direction of the Administrator

Signature: JAMES E RILEY JR Digitally signed by JAMES E RILEY JR Date: 2021.07.16 14:26:16 -07'00'

For Acting Manager, Seattle ACO

Title: Branch

Any alteration of this certificate is punishable by a fine of not exceeding $1,000, or imprisonment not exceeding 3 years, or both. This certificate may be transferred or made available to third persons by licensing agreements in accordance with 14 CFR 21.47. Possession of this Supplemental Type Certificate (STC) document by persons other than the STC holder does not constitute rights to the design data nor to alter an aircraft, aircraft engine, or propeller. The STC's supporting documentation (drawings, instructions, specifications, flight manual supplements, etc.) is the property of the STC holder. An STC holder who allows a person to use the STC to alter an aircraft, aircraft engine, or propeller must provide that person with written permission acceptable to the FAA. (Ref. 14 CFR 21.120).

This document is proprietary to Onboard Systems Int'l. Disclosure or reproduction is not allowed. © 2026 Onboard Systems Int'l., all rights reserved.

FAA STC continued

United States of America
Department of Transportation
Federal Aviation Administration

Supplemental Type Certificate

(Continuation Sheet)

Number: SR02719SE

other rotorcraft of these models on which other previously approved modifications are incorporated unless it is determined by the installer that the relationship between this change and any of those other previously approved modifications, including changes in type design, will introduce no adverse effect upon the airworthiness of that rotorcraft. A copy of this certificate, ICA, Owner's Manual (No. 120-156-00), and RFMS, must be maintained as part of the permanent records of the modified rotorcraft. Operational approval for external load operations must be granted by the local Aviation Authority.

If the holder agrees to permit another person to use this certificate to alter the product, the holder shall give the other person written evidence of that permission.

Any alteration of this certificate and/or the Type Certificate Data Sheet is punishable by a fine not exceeding $1,000, or imprisonment not exceeding 3 years, or both. This certificate may be transferred or made available to third persons by licensing agreements in accordance with Title 14 of the Code of Federal Regulations, part 21, section 21.47 (14 CFR 21.47). A transfer must be endorsed as provided on the reverse hereof. A Type Certificate holder who allows a person to use the Type Certificate to manufacture a new aircraft, aircraft engine, or propeller must provide that person with a written licensing agreement acceptable to the FAA. (Ref. 14 CFR 21.55).

This document is proprietary to Onboard Systems Int'l. Disclosure or reproduction is not allowed. © 2026 Onboard Systems Int'l., all rights reserved.

9.2 FAA STC SR02762SE

United States of America
Department of Transportation
Federal Aviation Administration

Supplemental Type Certificate

Number: **SR02762SE**

This certificate issued to: Onboard Systems International, LLC
13915 NW 3rd Court
Vancouver, WA 98685

Certifies that the change in the type design for the following product with the limitations and conditions therefore as specified hereon meets the airworthiness requirements of Part 27 *of* the Federal Aviation Regulations.

Original Product Type Certificate Number: H9EU

Make: Airbus Helicopters

Model: AS350B3

Description of Type Design Change:

Installation of Onboard Systems International Cargo Swing Suspension System in accordance with the Master Drawing List (MDL) No. 155-231-00, Revision 0, dated November 17, 2022, or later Federal Aviation Administration (FAA) approved revision. Maintained in accordance with the Instructions for Continued Airworthiness (ICA) No. 123-051-00, Revision 0, dated March 4, 2021, or later FAA-accepted revision. Operated in accordance with the RFMS, No. 121-071-00, Revision 1, dated February 13, 2023, or later FAA-approved revision.

Limitations and Conditions:

Approval of this change in type design applies only to those AS350B3 rotorcraft that are equipped with Rupture Resistant Fuel System per Airbus Helicopters STC ST7500 or ST7501. This approval should not be extended to other rotorcraft of these models on which other previously approved modifications are incorporated unless it is determined by the installer that the relationship between

(See Continuation Sheet Page 3 of 3 Pages)

This certificate and the supporting data which is the basis for approval shall remain in effect until surrendered, suspended, revoked, or a termination date is otherwise established by the Administrator of the Federal Aviation Administration.

Date of Application: July 22, 2022 *Date Reissued:*

Date of Issuance: March 6, 2023 *Date Amended:*

By Direction of the Administrator

Signature: DOUGLAS Y TSUJI
Digitally signed by DOUGLAS Y TSUJI
Date: 2023.03.07 06:19:03 -08'00'

For Acting Manager, Seattle ACO

Title: Branch

Any alteration of this certificate is punishable by a fine of not exceeding $1,000, or imprisonment not exceeding 3 years, or both. This certificate may be transferred or made available to third persons by licensing agreements in accordance with 14 CFR 21.47. Possession of this Supplemental Type Certificate (STC) document by persons other than the STC holder does not constitute rights to the design data nor to alter an aircraft, aircraft engine, or propeller. The STC's supporting documentation (drawings, instructions, specifications, flight manual supplements, etc.) is the property of the STC holder. An STC holder who allows a person to use the STC to alter an aircraft, aircraft engine, or propeller must provide that person with written permission acceptable to the FAA. (Ref. 14 CFR 21.120).

This document is proprietary to Onboard Systems Int'l. Disclosure or reproduction is not allowed. © 2026 Onboard Systems Int'l., all rights reserved.

FAA STC SR02762SE continued

United States of America
Department of Transportation
Federal Aviation Administration

Supplemental Type Certificate

(Continuation Sheet)
Number: **SR02762SE**

Limitations and Conditions (continued):

this change and any of those other previously approved modifications, including changes in type design, will introduce no adverse effect upon the airworthiness of that rotorcraft. A copy of this certificate, ICA, Owner's Manual (No. 120-156-00), and RFMS, must be maintained as part of the permanent records of the modified rotorcraft. Operational approval for external load operations must be granted by the local Aviation Authority.

If the holder agrees to permit another person to use this certificate to alter the product, the holder shall give the other person written evidence of that permission.

End

Any alteration of this certificate and/or the Type Certificate Data Sheet is punishable by a fine not exceeding $1,000, or imprisonment not exceeding 3 years, or both. This certificate may be transferred or made available to third persons by licensing agreements in accordance with Title 14 of the Code of Federal Regulations, part 21, section 21.47 (14 CFR 21.47). A transfer must be endorsed as provided on the reverse hereof. A Type Certificate holder who allows a person to use the Type Certificate to manufacture a new aircraft, aircraft engine, or propeller must provide that person with a written licensing agreement acceptable to the FAA. (Ref. 14 CFR 21.55).

This document is proprietary to Onboard Systems Int'l. Disclosure or reproduction is not allowed. © 2026 Onboard Systems Int'l., all rights reserved.

9.3 EASA STC for SR02719SE

EASA
European Union Aviation Safety Agency

SUPPLEMENTAL TYPE CERTIFICATE

10077086

This Certificate/Approval is issued by EASA, acting in accordance with Regulation (EU) 2018/1139 on behalf of the European Union, its Member States and of the European third countries that participate in the activities of EASA under Article 129 of that Regulation and in accordance with Commission Regulation (EU) No. 748/2012 to

ONBOARD SYSTEMS INTERNATIONAL

13915 NW 3RD COURT
VANCOUVER WA 98685
UNITED STATES OF AMERICA

and certifies that the change in the type design for the product listed below with the limitations and conditions specified meets the applicable Type Certification Basis and, if applicable, environmental protection requirements when operated within the conditions and limitations specified below:

Type Certificate Number: EASA.R.008
Type Certificate Holder: AIRBUS HELICOPTERS
Type: AS 350 / EC 130
Model: AS 350 B3
Original STC Number: FAA SR02719SE

Description of Design Change:
Onboard System Cargo Swing Suspension System for AS 350 B3 fitted with Crash Resistant Fuel Tank System (CRFS) as per TCH mod 0720034.

EASA Certification Basis:
The Certification Basis (CB) for the original product remains applicable to this certificate/ approval.
The requirements for environmental protection and the associated certified noise and/ or emissions levels of the product are unchanged and remain applicable to this certificate/approval without any impact on the noise database.

Associated Technical Documentation:
Master Drawings List No. 155-216-00, Rev 2, dated 30 March 2021
Instructions For continued Airworthiness No. 123-051-00, Rev 00, dated 4 March 2021
Rotorcraft Fight Manual Supplement No. 121-071-00, Rev 00, dated 27 April 2021

See Continuation Sheet(s)

For the European Union Aviation Safety Agency

Cologne, Germany, 13 August 2021

Fabrice LEGAY
Section Manager
Medium & Light Rotorcraft

An Agency of the European Union

Task Number: 60078984
ONBOARD SYSTEMS INTERNATIONAL - 302945

TE.CERT.00091-005 © European Union Aviation Safety Agency. All rights reserved. ISO9001 Certified. Page 1 of 2

This document is proprietary to Onboard Systems Int'l. Disclosure or reproduction is not allowed. © 2026 Onboard Systems Int'l., all rights reserved.

EASA
European Union Aviation Safety Agency

SUPPLEMENTAL TYPE CERTIFICATE - 10077086

or later revisions of the above listed document(s) approved/accepted on behalf of EASA in accordance with the Technical Implementation Procedures of EU/ USA Bilateral Agreement.

Limitations/Conditions:
Prior to installation of this change/repair it must be determined that the interrelationship between this change/repair and any other previously installed change and/ or repair will introduce no adverse effect upon the airworthiness of the product.

- End -

Task Number: 60078984
ONBOARD SYSTEMS INTERNATIONAL - 302945

An Agency of the European Union

TE.CERT.00091-005 © European Union Aviation Safety Agency. All rights reserved. ISO9001 Certified. Page 2 of 2

This document is proprietary to Onboard Systems Int'l. Disclosure or reproduction is not allowed. © 2026 Onboard Systems Int'l., all rights reserved.

9.4 Transport Canada Approval

Transport Canada Transports Canada

4900 Yonge Street, 4th Floor (PAARD)
Toronto ON M2N 6A5

Our file #
5010-O-21-0567

November 25, 2021

Federal Aviation Administration
Seattle ACO Branch
2200 S 216th Street
Des Moines, WA 98198-6547

Attention: Ms. Karen Murphy, Program Management Section

Subject: Acceptance of FAA STC SR02719SE latest date of issuance 06-03-2021

Dear Ms. K. Murphy:

This is in response to your letter dated 07-01-2021 requesting Transport Canada validation of the subject STC.

In accordance with our current policy associated with the review of foreign STCs, some STCs applicable to certain categories of aircraft may be accepted solely on the basis of their foreign certification, and do not require the issue of a corresponding certificate by Transport Canada. The subject STC falls within these criteria.

This STC will be entered in the national index of STCs that have been reviewed and accepted by Transport Canada for installation on Canadian registered aeronautical products.

This letter confirms formal acceptance of the referenced STC by Transport Canada. This acceptance reflects the models applicable at the time of application. Addition of models to an FAA STC – or an associated Approved Model List (AML) – that are not included in the "U.S. Eligible Aircraft List" found in Appendix B of the FAA/TCCA Implementation Procedures constitutes a change and application is required in accordance with those same Implementation Procedures in order to update this record.

Yours truly,

DocuSigned by:
C5962CA6FFA74B6...

Zoskales (Zack) Teclemariam, P.Eng.
Regional Manager, Aircraft Certification
National Aircraft Certification (PAARD)

cc: Onboard Systems International, 13915 NW 3rd Court, Vancouver, WA 98685

Canada

www.tc.gc.ca

RDIMS 18112842 v3

This document is proprietary to Onboard Systems Int'l. Disclosure or reproduction is not allowed. © 2026 Onboard Systems Int'l., all rights reserved.

9.5 ANAC STC for SR02719SE

ANAC
AGÊNCIA NACIONAL DE AVIAÇÃO CIVIL

CERTIFICADO SUPLEMENTAR DE TIPO
(*Supplemental Type Certificate*)

NÚMERO: 2021S12-07
(Number)

Este Certificado, emitido com base na Lei nº 7565 "Código Brasileiro de Aeronáutica", de 19 de dezembro de
This Certificate, issued in the basis of the Law No 7565 "Código Brasileiro de Aeronáutica", dated 19 December

1986, é conferido ao (à): Onboard Systems International
1986, is granted to:
13915 NW 3rd Court
Vancouver, WA 98685
USA

por ter a modificação ao projeto de tipo do produto abaixo citado, observadas as limitações e condições
for having the change to the type design of the product mentioned below, with the limitations and conditions
especificadas, satisfeito aos requisitos de aeronavegabilidade aplicáveis.
conditions there for as specified hereon, met the applicable airworthiness requirements.

Produto Original - Número do Certificado de Tipo: 8812 (ANAC)
Original Product - Type Certificate No:

Fabricante: Airbus Helicopters
Manufacturer:

Modelo(s): AS 350 B3
Model (s):

DESCRIÇÃO DA MODIFICAÇÃO AO PROJETO DE TIPO:
Description of Type Design Change:

Installation of Onboard Systems International Cargo Swing Suspension System in accordance with Onboard Systems Master Drawing List (MDL), Document No. 155-216-00, Rev. 2, dated 30 Mar. 2021, or later approved revision.

This CST validates in Brazil the STC No. SR02719SE, issued by FAA (USA).

LIMITAÇÕES E CONDIÇÕES:
Limitations and Conditions:

See continuation sheet for applicable data.

DATAS: *Dates of:*
Do requerimento: 09 June 2021 *Aplication:*
Da emissão: 10 Dec. 2021 *Issuance:*
Da reemissão: *Reissuance:*
Da emenda: *Amendment:*

Gerência de Certificação de Projeto de Produto Aeronáutico
(Aeronautical Product Design Certification Branch)

Superintendência de Aeronavegabilidade
(Department of Airworthiness)

Certificado assinado digitalmente (Digitally signed Certificate)

F-400-01G

Fl. 01 de 02
Sheet of

H.02-5600-0

This document is proprietary to Onboard Systems Int'l. Disclosure or reproduction is not allowed. © 2026 Onboard Systems Int'l., all rights reserved.

ANAC
AGÊNCIA NACIONAL DE AVIAÇÃO CIVIL

Folha de Continuação ao
(Continuation Sheet to)

CERTIFICADO SUPLEMENTAR DE TIPO
(Supplemental Type Certificate)

NÚMERO: 2021S12-07
(Number)

LIMITAÇÕES E CONDIÇÕES:
Limitations and Conditions:

I. The approval of this type design change should not be extended to other rotorcraft of this model on which other previously approved modifications are incorporated unless it is determined by the installer that the relationship between this change and any of those other previously approved modifications, including changes in Type Design, will introduce no adverse effect upon the airworthiness of that rotorcraft.

II. If the holder agrees to permit another person to use this certificate to alter the product, the holder shall give the other person written evidence of that permission.

III. Operation must be performed in accordance with the FAA approved Rotorcraft Flight Manual Supplement (RFMS), Onboard Systems Document No. 121-071-00, Rev. 0, dated 28 Apr. 2021, or later FAA approved revision.

IV. The maintenance of the rotorcraft shall be performed in accordance with the Onboard Systems Instructions for Continued Airworthiness (ICA), Document No. 123-051-00, Rev. 0, dated 04 Mar. 2021, or later FAA accepted revision.

V. Approval of this change in type design applies only to those AS 350 B3 rotorcraft that are equipped with Crash Resistant Fuel System (CRFS) per Airbus modification No. 07.20034 or ANAC CST No. 2017S09-03 (which validates in Brazil Airbus STC No. 10060852, Rev. 1, issued by EASA) or Rupture Resistant Fuel System per ANAC CST No. 2017S09-04 (which validates in Brazil Airbus STC No. 10061056, Rev. 1, issued by EASA).

VI. Operational approval for external load operations must be granted by ANAC.

VII. For the drawings and documents listed on Onboard Systems MDL, Document No. 155-216-00, Rev. 2, dated 30 Mar. 2021, with reference to other FAA STC for their revision and date, the Onboard Systems Supplement to Master Drawing List of FAA STC SR02719SE, Document No. 155-226-00, Rev. 0, dated 09 Dec. 2021, or later accepted revision, must be considered.

VIII. The applicable placards presented in the Onboard Systems drawings No. 215-200-00, Rev. 0, dated 03 Apr. 2007; 215-423-00, Rev. 0, dated 28 Oct. 2021; AND 215-427-00, Rev. 0, dated 10 Nov. 2021, or later approved revisions of these drawings, must be installed on the rotorcraft.

IX. A copy of this Certificate, the Supplement referred on item III above, the ICA referred on item IV above and the Onboard Systems Owner's Manual, Document No. 120-156-00, Rev. 1, dated 30 Mar. 2021, shall be maintained as part of the permanent records of the modified rotorcraft.

----------END----------

F-400-01G | Fl. 02 de 02 *Sheet of* | H.02-5600-0

This document is proprietary to Onboard Systems Int'l. Disclosure or reproduction is not allowed. © 2026 Onboard Systems Int'l., all rights reserved.

9.5.1 Placards for ANAC STC

Install the following (not provided with kits) per Section 4.7.

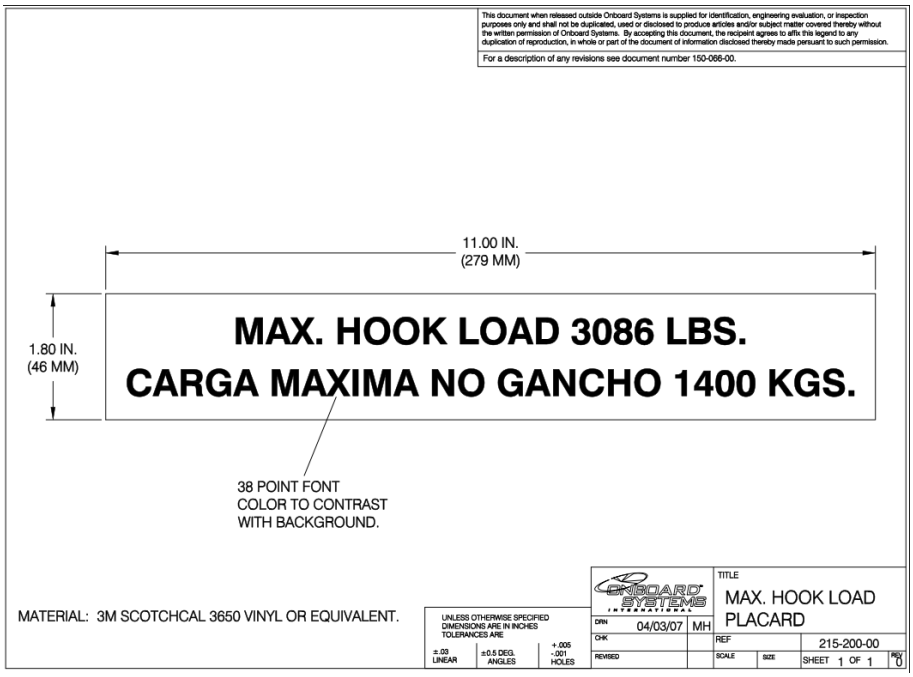

The following is to be installed per Section 4.7 if Cargo Hook P/N 528-028-02 with Surefire is installed

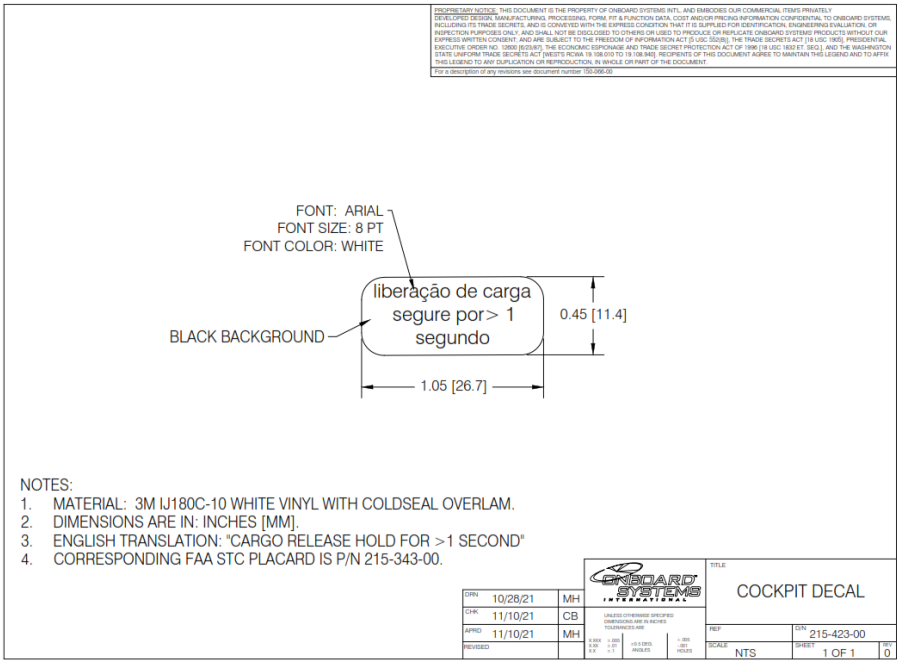

This document is proprietary to Onboard Systems Int'l. Disclosure or reproduction is not allowed. © 2026 Onboard Systems Int'l., all rights reserved.

The following is to be installed on the bottom side of the electrical compartment of the Cargo Hook if Cargo Hook P/N 528-028-02 with Surefire is installed.

PROPRIETARY NOTICE: This document is the property of Onboard Systems Int'l, and embodies our commercial item's privately developed design, manufacturing, processing, form, fit & function data, cost and/or pricing information confidential to Onboard Systems, including its trade secrets, and is conveyed with the express condition that it is supplied for identification, engineering evaluation, or inspection purposes only, and shall not be disclosed to others or used to produce or replicate Onboard Systems' products without our express written consent; and are subject to the Freedom of Information Act [5 USC 552(b)], the Trade Secrets Act [18 USC 1905], Presidential Executive Order No. 12600 [6/23/87], the Economic Espionage and Trade Secret Protection Act of 1996 [18 USC 1832 et. seq.], and the Washington State Uniform Trade Secrets Act [West's RCWA 19.108.010 to 19.108.940]. Recipients of this document agree to maintain this legend and to affix this legend to any duplication or reproduction, in whole or part of the document.
For a description of any revisions see documents number 150-066-00.

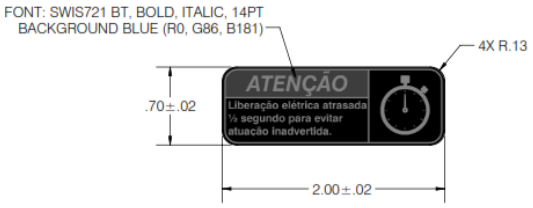

NOTES:
1. MATERIAL: 3M 7940 FOIL.
2. BLACK BACKGROUND UNLESS OTHERWISE NOTED.
3. TEXT COLOR: SILVER
4. FONT: SWISS721 LT BT, 7PT, UNLESS OTHERWISE NOTED.
5. LINES & GRAPHICS COLOR: SILVER
6. CORRESPONDING FAA STC P/N IS 215-336-00.
7. ENGLISH TRANSLATION:
"NOTICE: ELECTRICAL RELEASE DELAYED 1/2 SECOND TO AVOID INADVERTENT ACTUATION".

DRAWN	11/09/21	CB	
CHKD	11/09/21	MH	
APRD	11/10/21	MH	
REVD			

ONBOARD SYSTEMS INTERNATIONAL

UNLESS OTHERWISE SPECIFIED DIMENSIONS ARE IN INCHES
TOLERANCES ARE
X.XXX ±.005 | X.XX ±.01 | X.X ±.1 | ANGLES X ± .5° X.X ± .5° | HOLES +.005 -.001

TITLE: SUREFIRE NOTICE DECAL

REF	SUREFIRE	P/N	215-427-00
SCALE	1:1	SHEET	1 OF 1
REV	0		

This document is proprietary to Onboard Systems Int'l. Disclosure or reproduction is not allowed. © 2026 Onboard Systems Int'l., all rights reserved.